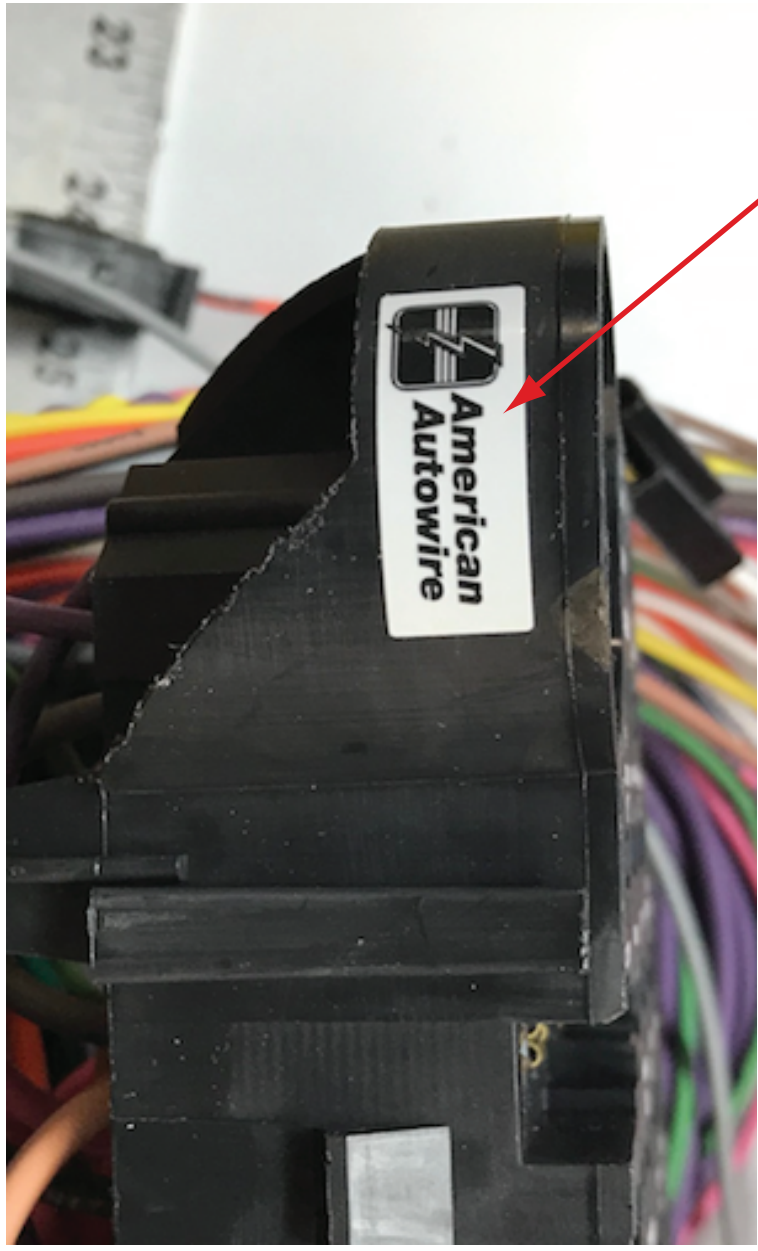

NOTE: If the fuse panel on your 500981 64-67 Chevelle kit ***DOES NOT*** have a sticker like the photo at the left, you have the first design harness and your instructions are listed below and follow this page.

Number	Description
500332	Headlight Switch
500707	Fuse, Relay, and Flasher kit
500708	Courtesy Light kit
500919	Practice Terminal Crimping Set
500957	Dash Harness kit
500982	Engine Wiring Kit
500980	Front Light Wiring kit
500987	Instrument Cluster Wiring kit
510112	Console Wiring kit
510111	Rear Body Wiring kit
510476	Alternator and main power Connection kit
500042	Floor Dimmer Switch
92968190	Kit Introduction Instruction Sheet
92970006	Warning Sheet

American Autowire

www.americanautowire.com 856-933-0801

64-67 Chevelle
First Design
Instructions

92972888 rev. 0.0 2/12/2020

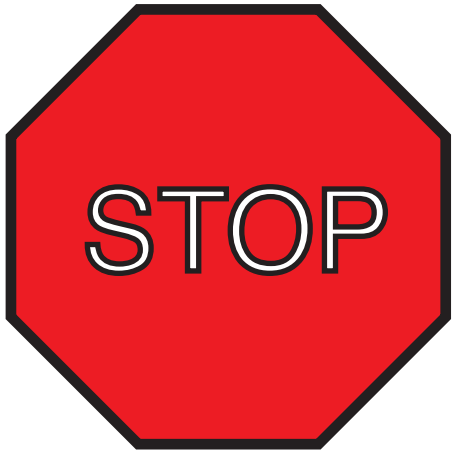

WARNING:

Validate the kit contents with the component list included on page 2 of this sheet before proceeding. This kit is intended to be used in a modified vehicle. Please read this sheet thoroughly and be sure that you understand everything explained on it prior to opening any of the enclosed packages, or before attempting to install any of the components. Once this kit has been opened or a component installed, the kit is not returnable.

1. This kit should typically be used in a **MODIFIED** application only.

2. This kit is wired for use with a factory heater system or any aftermarket heater and A/C system. The kit supplies power to a factory A/C control head but **DOES NOT** include the actual A/C harness for an original factory A/C vehicle. For all 1964, 1965 and 1967 Chevelles, the factory original A/C harnesses are available under our Factory Fit product line, and can be ordered separately (1964 - CH45759; 1965 - CF45657; and 1967 - CH70646). For the 1966 Chevelle application, you will need to purchase the AAW A/C add-on kit P/N 510403.

3. This kit supports the use of a high current self-exciting 1-wire alternator or other style internally regulated alternators. An adapter may be necessary in some applications. The use of a stock, low amperage alternator is seriously discouraged as they cannot handle the higher current requirements of updated ignition systems, electric fans, aftermarket A/C systems, stereo systems, air ride suspensions, and other power hungry accessories and will ultimately create performance issues with the system.

4. This kit **WILL NOT** support the use of a factory ammeter. All AAW kits are engineered to supply the optimum charge to the battery. To achieve this performance, we route our 6ga. charge wire directly from the alternator output charge terminal to the starter battery termial. Due to the path of the charge being altered from the stock configuration, the gauge can no longer see a charge vs. a discharge, so it will not work properly. When ammeters were originally used, most generator or alternator current outputs were rated at a maximum of about 25-60 amps. Modified cars being built today typically utilize a 100 amp or higher output alternator. With these higher current units, ammeters, generally speaking, become a safety hazard. Ammeters are usually wired in parallel to the charging circuit, are typically unfused, and can short very easily causing a fire. A voltmeter is recommended as a good alternative.

5. This kit **IS NOT** set up with a resistance wire for a standard, points type ignition system. It is wired with a full 12 volt primary ignition feed that is hot in the run position. Primary ignition voltage in the starting position is handled via a full 12 volt bypass wire. Our system will support HEI, MSD, other electronic ignition systems, as well as most all computerized Fuel Injection systems. If you wish to run a points type system, there are illustrations on the engine connection pages to do so. Extra parts (ballist resistor) that are not included in this kit will be required to complete that operation.

500981 - Classic Update Series Kit
1964-67 Chevrolet Chevelle

This kit contains the following components:

Bag	Part Number	Description	Quantity
	500042	Floor Dimmer Switch	1
	500332	Headlight Switch	1
	500674	Ignition Switch lock cylinder and keys	1
	500707	Fuse, Relay, and Flasher kit	1
N	500708	Courtesy Light kit	1
	500709	Ignition Switch	1
	500919	Practice Terminal Crimping Set	1
G	500957	Dash Harness kit	1
L	500980	Front Light Wiring kit	1
J	500982	Engine Wiring Kit	1
M	500986	Rear Body Wiring kit	1
H	500987	Instrument Cluster wiring kit	1
K	500988	Console wiring kit	1
Z	510476	Alternator and Main Connection kit	1
	92967369	Firewall Modification Template	1
	92968190	Kit Introduction Instruction Sheet	1
	92970006	Warning Sheet	1

Validate the kit contents with this component list. If there are any discrepencies with incorrect or missing parts, stop your installation and notify the supplier you purchased the kit from before proceeding.

American Autowire
www.americanautowire.com 856-933-0801

500981

Classic Update Series

1964-67 Chevelle

START HERE !

PLEASE READ THIS BEFORE STARTING INSTALLATION !

This wiring kit is designed for ease of installation. Please read the guidelines below, BEFORE STARTING your installation, to guarantee a successful job! Use an appropriate crimping tool which folds the crimp wings on the terminals as shown below. ALL TERMINALS THAT YOU INSTALL SHOULD BE PROPERLY SOLDERED.
Our factory terminations are install by GM approved five ton presses, and soldering is not necessary on these terminations.

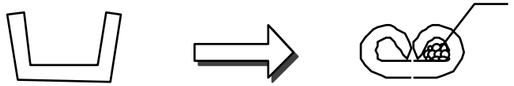

end view of terminal

proper crimp of terminal

INSTALLATION INSTRUCTIONS

STEP 1: DISCONNECT YOUR BATTERY:
Disconnect the battery before installing the wiring kit to prevent any accidental shorting caused by loose bare wire ends.

STEP 2: START INSTALLING KIT:
This kit is broken down into individual steps that are identified by a letter printed on the instruction sheets visible through each bag. These letters are the order of operation for installing your kit. Start with the bag letter G , then H , etc.
The order of installation is shown below.

G 500957 Dash Harness Kit
H 500987 Instrument Cluster Kit
J 500982 Engine Kit
K 500988 Console Kit
L 500980 Front Light Kit
M 500986 Rear Body Kit
N 500708 Courtesy Light Kit
Z 510476 Alternator and Main Connection Kit

STEP 3:RECONNECT YOUR BATTERY:
When you have completed the installation and are ready to reconnect the battery, make sure that the following electrical system grounds are in place:

A.Battery is grounded to the ENGINE BLOCK.
B.Battery is grounded to the frame.
C.Engine block is grounded to the frame.
D.Body is grounded to the frame.

STEP 4:CHECK ALL ELECTRICAL FUNCTIONS:
Any non-functioning items should be checked for proper installation. Any problems with your wiring and electrical circuit functions should be addressed to American Autowire Systems, Inc. as soon as possible to avoid any warranty problems.

If you have any questions concerning this or any of our products, please feel free to call us at 1-800-482-WIRE.

AMERICAN AUTOWIRE MAKES IT EASY !!

We carry many accessories for your 64-67 Chevelle

p/n R0067108
OEM style non-stick harness tape

OEM style wiper switch.
p/n 01993632 (64) 2 spd
p/n 01993633 (64) 1 spd w/washer
p/n 01993678 (65) 2 spd
p/n 01993680 (65) 1 spd
p/n 01993679 (66) 2 spd
p/n 01993395 (67) 2 spd

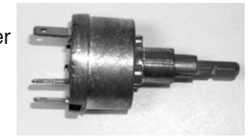

p/n 01993661 (64)
p/n 01993307 (65 - 67)
Muncie 4 speed back up lamp switch.

p/n 500649
OEM small terminal crimping tool (18-14 gauge).

p/n 500523
OEM large terminal crimping tool (12-8 gauge).

p/n 38131
Breakerless Ignition Module,
GM V-8 POINT CONVERSION KIT

p/n 36294 (1964)
p/n 36295 (1965)
p/n 36296 (1966)
p/n 36297 (1967)

Factory assembly manual.
(It's what they used on the assembly line to build your Chevelle!)

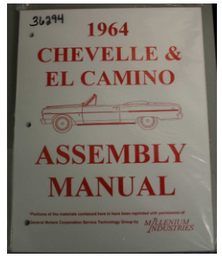

American Autowire

800-482-9473

Classic Update Series

1964-67 Chevelle

500981

92968190 instruction sheet rev. 5.0 1/22/2019

Classic Update Series

Chevelle

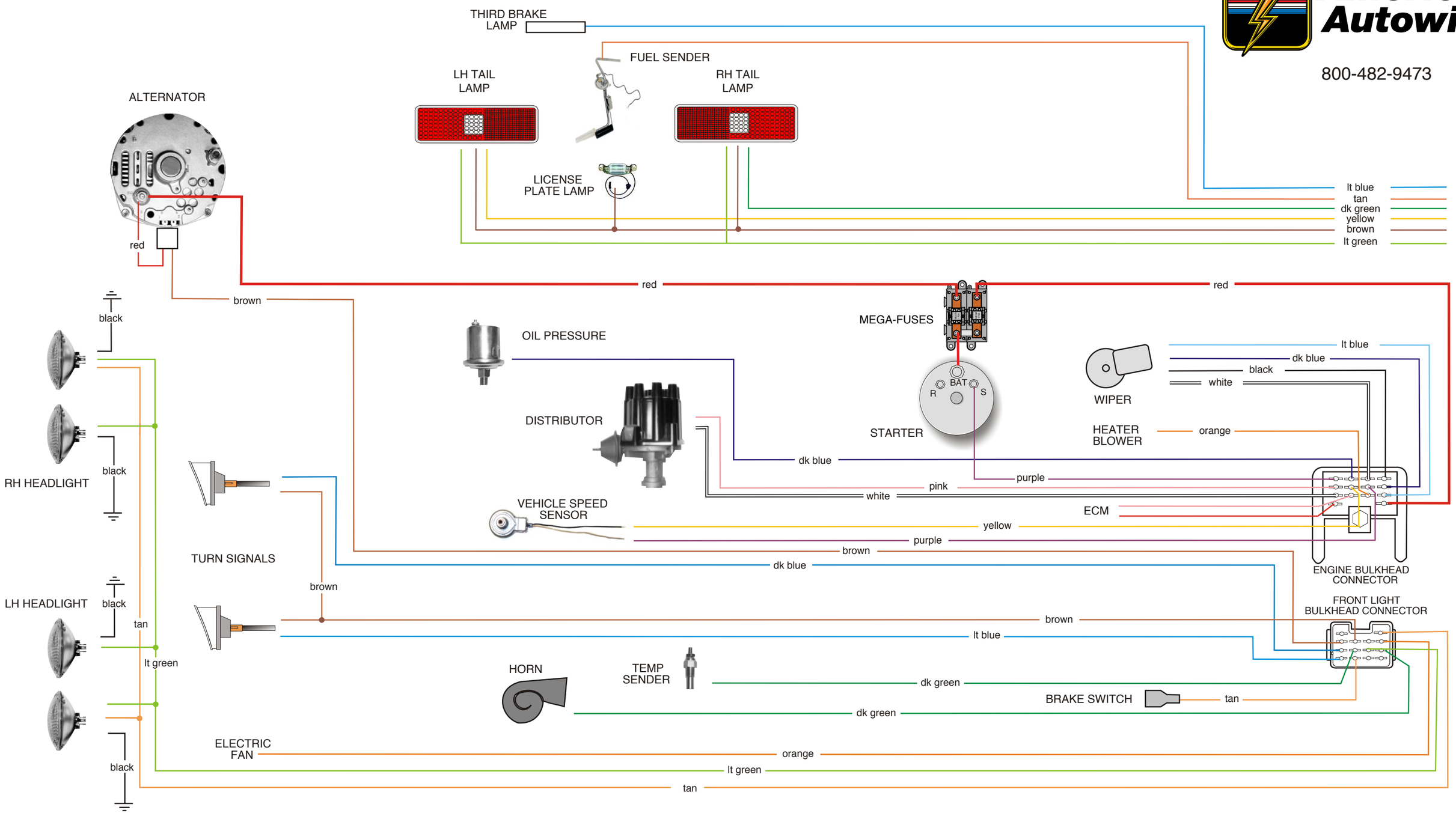

NOTICE: This schematic drawing is for reference only. Do not use the schematic to install this wiring kit!
Use the instruction sheets included in each bag, which includes directions for proper terminations, and specific applications (such as Rally Sport).

500981

92968190 instruction sheet rev. 5.0 1/122/2019

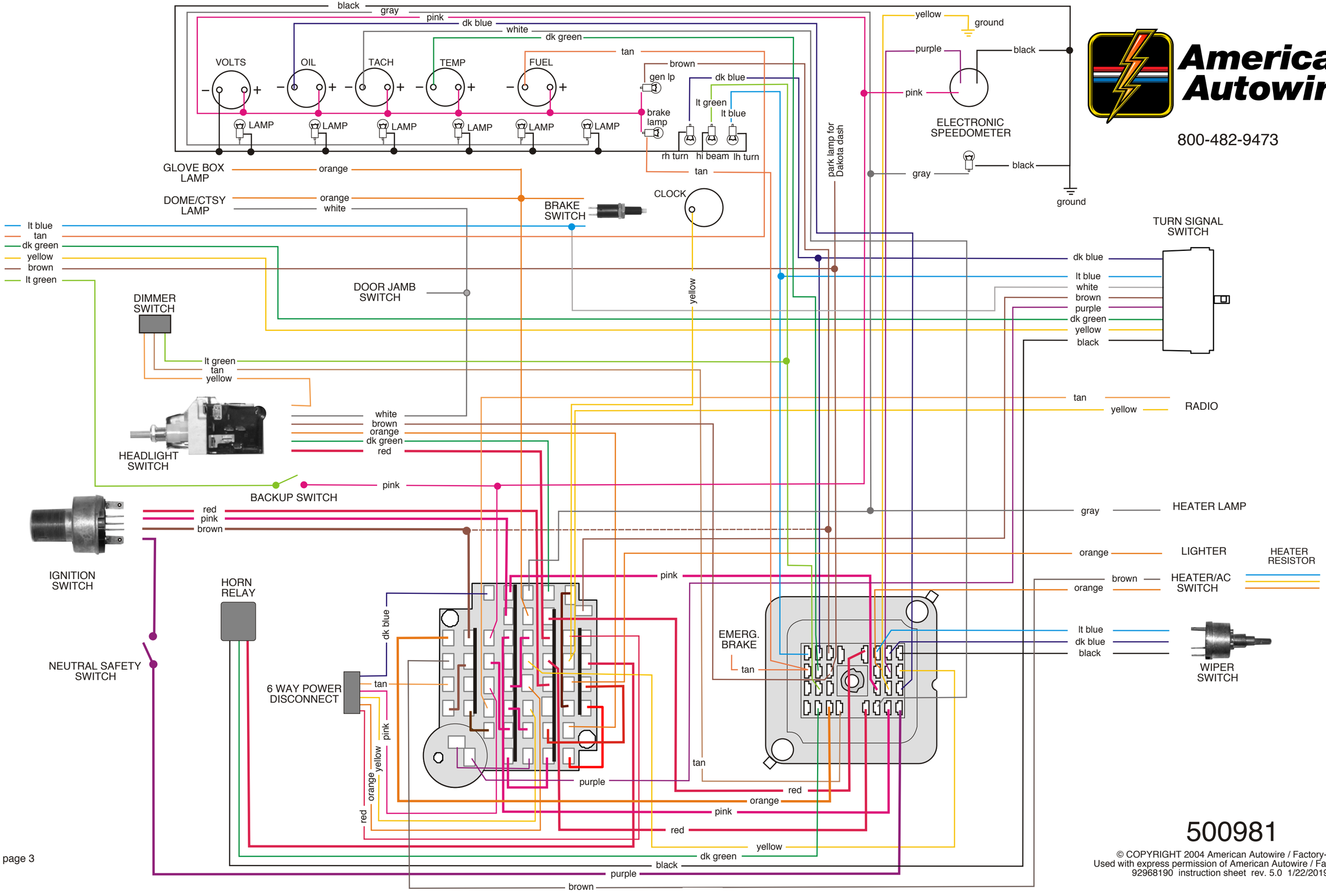

American Autowire

800-482-9473

500981

92968190 instruction sheet rev. 5.0 1/22/2019

THIS PAGE HAS BEEN INTENTIONALLY LEFT BLANK

American Autowire
800-482-9473

500981

92968190 instruction sheet rev. 5.0 1/22/2019

Template for firewall modification for some Classic Update Kits

Classic Update Series kits are based on the 1968 and later GM bulkhead assembly which has a different mounting footprint than earlier bulkhead connectors. Therefore, it will be necessary to modify the firewall in 1967 and earlier cars to accept the 1968 and later design bulkhead. This enclosed template can be used for this purpose.

We suggest that this template be glued to stiff cardboard or a thin piece of plastic. The white area can then be cut out with a razor knife to define the area of material that needs to be removed from the existing bulkhead area. Proceed as follows:

1. Position the template against the firewall aligning the right hand edge with the right hand edge of the existing bulkhead hole.
2. Trace the opening area onto the existing bulkhead and cut out the area.
3. Drill the two .125 holes for the new bulkhead mounting screws.
4. Mount the fuse box assembly from the passenger compartment side and check the fit into the new bulkhead hole. It may be necessary the do some fine tuning on the hole size for an exact fit.
5. Screw in the new fuse box retaining screws to complete securing the new fuse box assembly to the firewall

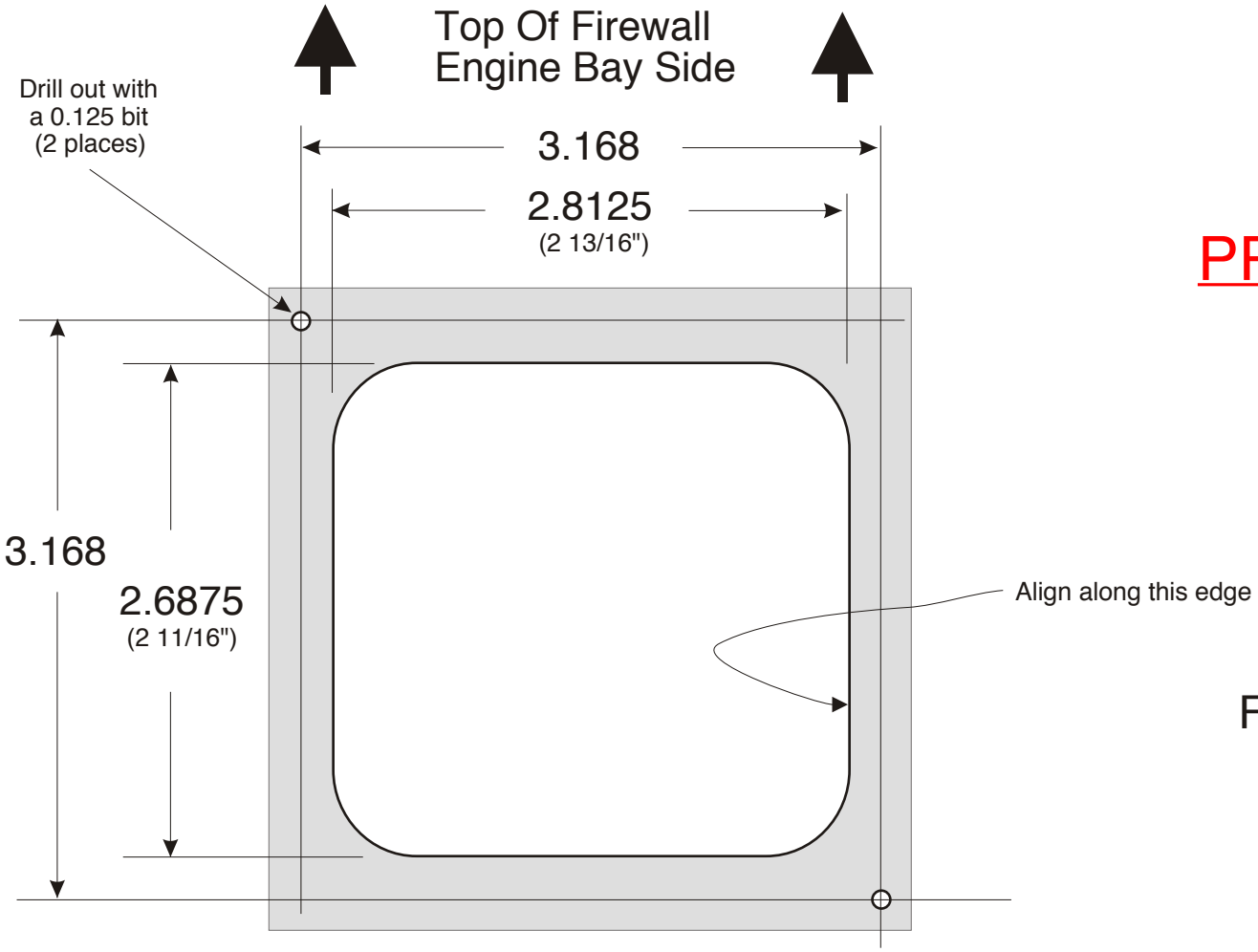

PRINT ON ADHESIVE LABEL SHEET

Firewall Modification Template

92967369

92967369 instructions Rev 5.0 4/22/2014

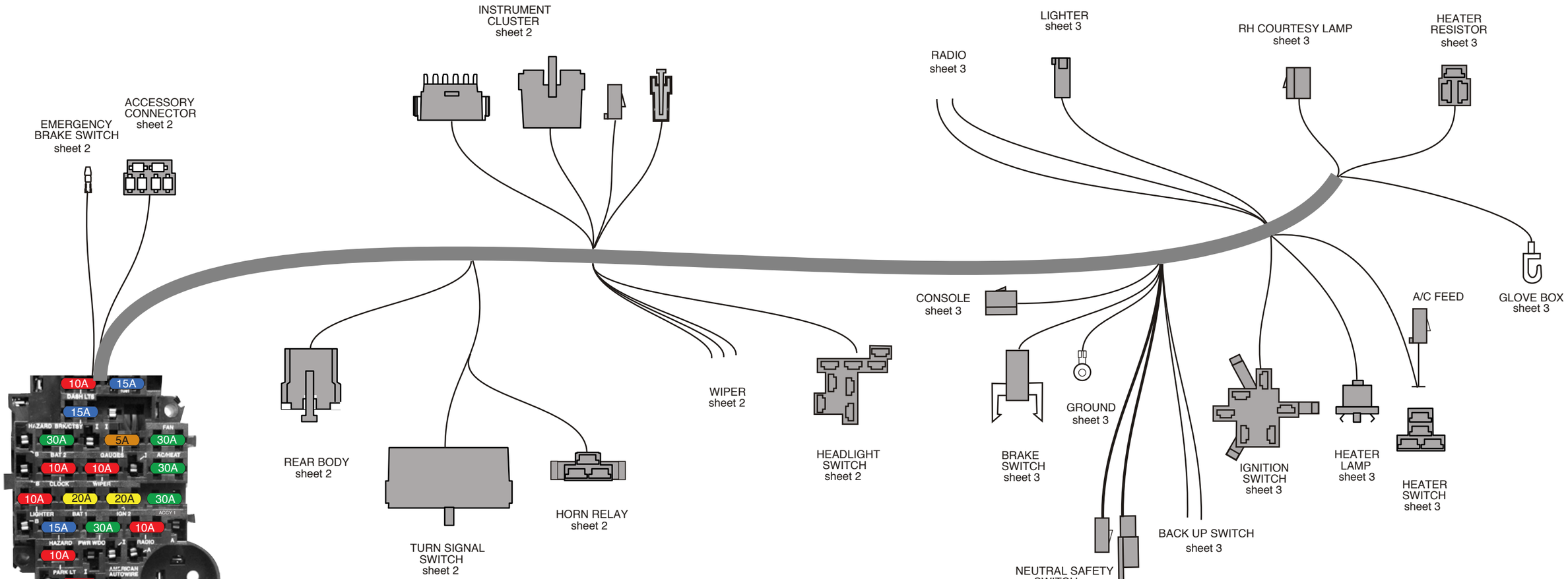

INSTALLING THE FUSE BOX

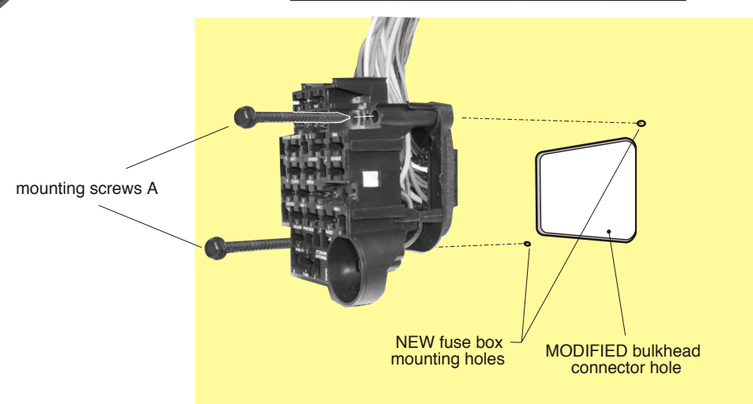

Fuse Panel Installation Instructions

Following these simple instructions will guarantee a successful installation of your American Autowire fuse panel harness.

1. Study the diagram above to familiarize yourself with the dash harness.
2. Modify your firewall opening and install the fuse box (see item #1 below left, and 92967369 template).
3. Route the dash harness using the factory support straps.
4. Make all connections as shown on the following pages of this dash harness kit.
5. Once this harness is installed, continue to bag 'H', and install the rest of the kit (bags H,J,K,L,M).

1. Locate the stock OEM bulkhead hole in the driver side of the firewall. **NOTE: You will need to modify the opening in the firewall by making it larger. See firewall template 92967369 to help with this operation. The new right hand upper mounting hole will be located where there is a raised area in the firewall very near the brake booster. The fusebox will still mount fine.**
2. Mount the fuse box with the flasher can in the bottom right corner, as shown above.
3. Using the two mounting screws A, attached the fuse panel to the firewall.

American Autowire
www.americanautowire.com 856-933-0801

1964-67 Chevelle
bag G
DASH KIT
500957
92968111 Rev 2.0 8/21/2015

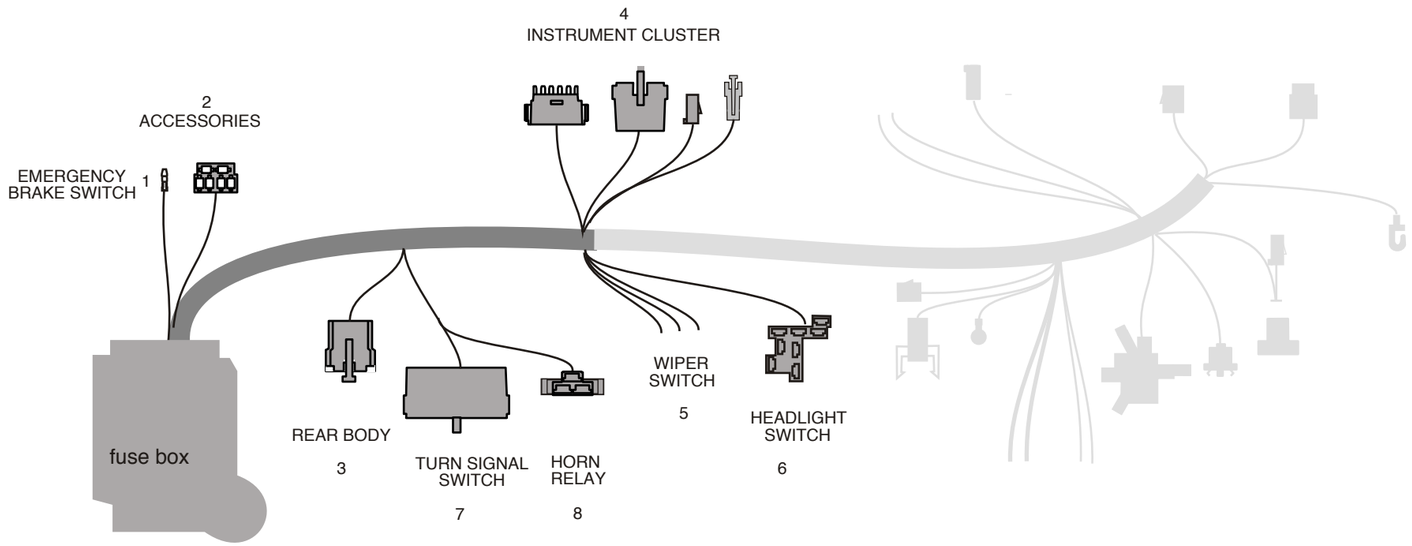

1	EMERGENCY BRAKE	Tan	Connect to the emergency brake switch. This is the ground circuit for the brake switch light.		
2	ACCESSORIES		Use the provided connector J attached and terminals as power leads for the following:		
			Fuse	Rating	
		Dark Blue	FUEL	15 amp	Fused 12 volt IGNITION feed for fuel pump (may also be used to feed power to another ignition circuit)
		Orange	BAT1	20 amp	Fused 12 volt BATTERY feed for power seats (may also be used to feed power to another battery circuit)
		Red	BAT2	30 amp	Fused 12 volt BATTERY feed for power door locks (may also be used to feed power to another accessory circuit)
		Pink	IGN1	20 amp	Fused 12 volt IGNITION feed for cruise control (may also be used to feed power to another ignition circuit)
		Yellow	PWRWDO	30 amp	Fused 12 volt IGNITION feed for power windows (may also be used to feed power to another ignition circuit)
		Tan	ACCY1	30 amp	Fused 12 volt ACCESSORY feed (may also be used to feed power to an accessory circuit)
3	REAR BODY		This connector will mate to the connector from the Rear Body harness found in bag L.		
		Tan	Fuel tank sender lead		
		Brown	Tail lamp feed		
		Yellow	LH turn / brake feed		
		Dark Green	RH turn / brake feed		
		Orange	Dome / courtesy lamp feed		
		White	Dome / courtesy lamp ground		
		Light Green	Back up lamp feed		
		Light Blue	Third brake light		
4	INSTRUMENT CLUSTER DISCONNECTS		These connectors will plug into the gauge disconnect harness from bag H. Wire identifications are described on the instruction sheets from bag H.		
5	WIPER	Black	Ground circuit for low speed.		
		Dk Blue	Ground circuit for washer.		
		Lt Blue	Ground circuit for hi speed.		
6	HEADLIGHT SWITCH				
		Red	12 volt feed to switch	BAT location on headlight switch	
		Orange	12 volt feed in to park/tail	PARK / TAIL FEED IN location on headlight switch. (commonly found on GM headlight switches)	
		Brown	Park lamp feed out	PARK LAMP OUT location on headlight switch.	
		Yellow	Dimmer feed	DIMMER FEED location on headlight switch.	
		Dk Green	Instrument lamp feed	INSTRUMENT LAMP location on headlight switch.	
		White	Dome / courtesy ground	GROUND location on headlight switch.	
7	TURN SIGNAL SWITCH		This harness has a connector on it for the 3-7/8 1969-1974 GM column connection used by GM and many after-market manufacturer s. If you are using a stock 1964-67 turn signal switch, remove the existing connector and terminals from your steering column and install terminals M and connector L (see diagram G) on page 3. If using a late model GM steering column or an after-market column using the 4-1/4 GM turn signal connector, replace existing connector with connector L, matching wires by color.		
		White	12 volt feed from brake switch		
		Dark Green	RH tail lamp		
		Yellow	LH tail lamp		
		Purple	12 volt feed from turn flasher		
		Brown	12 volt feed from hazard flasher		
		Dark Blue	RH front park lamp		
		Light Blue	LH front park lamp		
		Black	Horn relay ground wire to horn switch		
8	HORN RELAY		Plug the horn relay (found in the fuse bag) into this connector.		
		Red	12 volt battery		
		Black	Relay ground circuit (to steering column)		
		Green	Triggered 12 volts to horn		

Wiper switch connections

In each case install the female terminal supplied and apply connector shown.

64, 65 Single Speed with washer

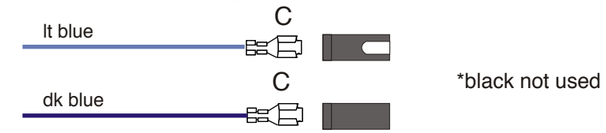

64, 65 2 Speed with washer

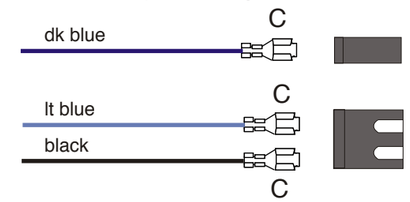

66 2 Speed with washer

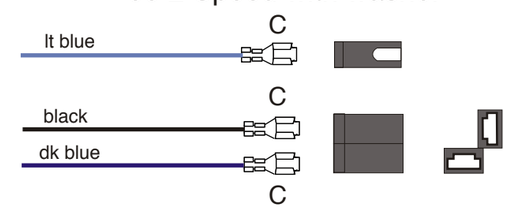

67 Chevelle All

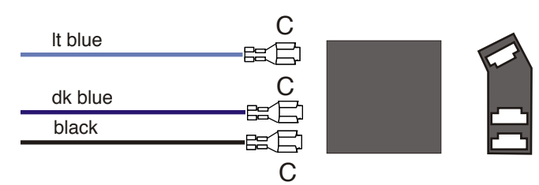

American Autowire

www.americanautowire.com 856-933-0801

1964-67 Chevelle

DASH KIT 500957

92968111 Rev 2.0 8/21/2015

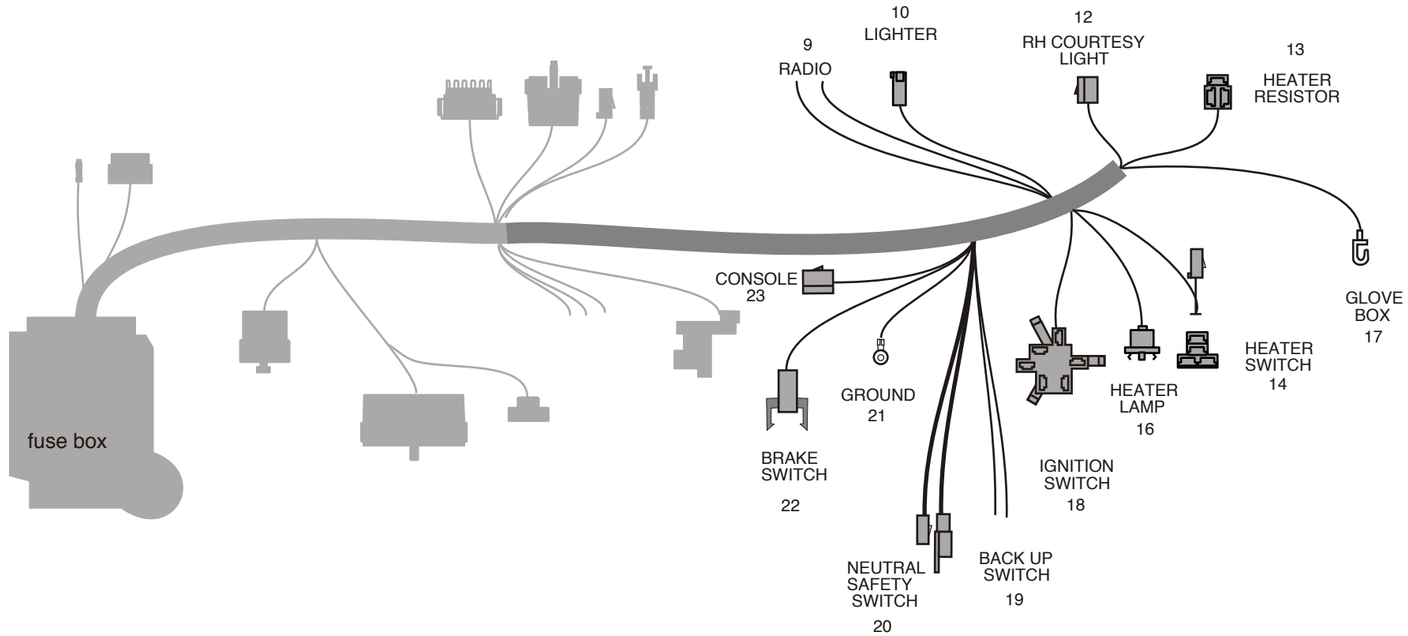

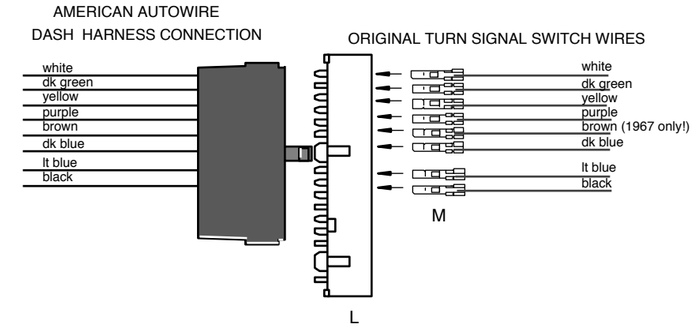

NOTE: Some original turn signal switches used striped wire. The color of the stripe will correspond to the color shown above (EG: black with a light blue stripe = light blue).

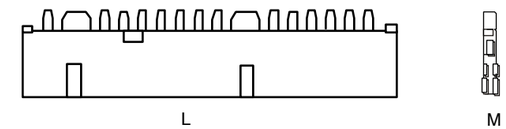

DIAGRAM G

DIAGRAM F

Automatic Transmission Neutral Safety Switch Jumper Harness for a car with a column mounted automatic transmission. Plug onto #20 below left

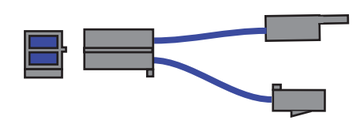

9	RADIO	Tan	Radio accessory feed.
		Yellow	Radio 12 volt clock lead (battery feed)
10	LIGHTER	Orange	Connect to lighter. (battery feed)
11	CONSOLE CONNECTION	These wires are for use on a console vehicle. For wire functions, refer to bag K, 500664.	
12	RH COURTESY LAMP	Plug this connector into the mating connector from the courtesy lamp kit bag N, 500708.	
		Orange	12 volt battery feed fo lamp
		White	Ground circuit for lamp
13	HEATER RESISTOR	Plug this connector into the factory heater resistor located on top of the heater box of a non A/C car.	
14	HEATER SWITCH	Plug this connector into the factory heater switch.	
		Brown	12 volt accessory feed to heater / ac switch (if using aftermarket a/c, use the short brown wire as the accessory feed wire to a/c harness.)
.			
		Yellow	Heater resistor
		Lt Blue	Heater resistor
		Orange	Heater resistor
16	HEATER LAMP	Gray	Heater lamp
17	GLOVE BOX LIGHT	Orange	Connect to the original factory glove box lamp switch. If not using, just unplug and tape back.
18	IGNITION SWITCH	Red	12 volt battery feed
		Pink	12 volt ignition feed
		Brown	12 volt accessory feed
		Purple	12 volt starter feed
19	BACK UP SWITCH	Connect these wires to the back up switch on the column or console shifter.	
		Pink	12 volt ignition feed 'in' to back up lamp switch
		Lt Green	12 volt feed 'out' to back up lamps
20	NEUTRAL SAFETY SWITCH	If using a column mounted automatic transmission, plug these wires into the NSS jumper harness in Diagram F at the right, then plug onto the neutral safety switch on the column. If using with console mounted automatic transmission, plug these wire into the NSS wires on the console harness. If using a manual transmission, plug these wires together.	
		Purple	12 volt feed 'in' to neutral safety switch.
		Purple	12 volt feed 'out' to starter
21	GROUND	Black	Connect to a good chassis ground.
22	BRAKE SWITCH	Plug this connector into the factory brake switch.	
		Orange	12 volt feed 'in' to switch.
		White	12 volt feed 'out' to steering column switch.
		Lt Blue	12 volt feed 'out' to third brake light.
23	CONSOLE	Plug into console extension 500988 where applicable.	
		Orange	12 volt battery feed
		Grey	Console illumination lamp
		White	Courtesy ground

American Autowire
www.americanautowire.com 856-933-0801

1964-67 Chevelle

DASH KIT

500957

92968111 Rev 2.0 8/21/2015

THIS PAGE HAS BEEN
INTENTIONALLY LEFT BLANK

American Autowire
www.americanautowire.com 856-933-0801

1964-67 Chevelle
DASH KIT
500957

92968111 Rev 2.0 8/21/2015

Classic Update Series

*** These are special instructions for connecting your wiring system to a stock instrument cluster. ***
(Note: This kit does not support the use of a stock ammeter.)

REFER TO THE ATTACHED DIAGRAMS FOR YOUR APPLICATION YEAR. USE THE ENCLOSED PARTS AND INFORMATION BELOW FOR WIRE TERMINATION AND GAUGE CONNECTION.

NOTE: If you are using aftermarket gauges, follow the instructions from the after market gauge package included in this kit (92965220).

CONNECTOR A

TAN	Brake Warning Lamp	Install components shown on the following sheets, and plug into the brake light hole in cluster. ('67 Chevelle and Nova only).
DK BLUE	Right Turn Indicator	Install components shown on the following sheets, and plug into the right turn indicator hole in the cluster.
LT BLUE	Left Turn Indicator	Install components shown on the following sheets, and plug into the left turn indicator hole in the cluster.
LT GREEN	Hi Beam Indicator Lamp	Install components shown on the following sheets, and plug into the high beam hole in cluster.
TAN	Fuel Gauge	Install components shown on the following sheets, and plug into the fuel gauge.
DK BLUE	Oil Gauge / Lamp	Install components shown on the following sheets, and plug into the oil gauge or lamp.
DK GREEN	Temp Gauge / Lamp	Install components shown on the following sheets, and plug into the temp gauge or lamp.
WHITE	Tach (loose wire)	This wire is used on factory gauge applications. Install components shown on the following sheets, and plug into the tachometer.
BROWN	Generator Lamp (loose wire)	This wire is used on warning lamp applications. This wire is stamped "ALT-IGN". Install components shown on the following sheets, and plug into the generator (alternator) lamp hole in cluster.

CONNECTOR B

PINK	12V ignition	Install components shown on the following sheets, and connect to gauges or warning lights requiring a 12V ignition feed.
GREY	Instrument Lamps	Install components shown on the following sheets, and plug into the instrument lamps.
BLACK	Ground	Connect to the back of the instrument cluster housing.
BROWN	Dakota Digital only (loose wire)	This wire is stamped "PARK LIGHTS". Use this wire if you are using a Dakota Digital instrument cluster. Connect to "PARK" light location according to manufacturer's instructions, in order to operate dimmer function when headlights are turned on.

CONNECTOR C

This connector is used when using an aftermarket electronic speedometer. Follow the manufacturer's instructions when installing these wires. **Twist these two wires together for their entire length to prevent interference. If you are using the stock speedometer discard this connector.**

YELLOW	Speedo Ground	Connect to VSS "-" on speedometer.
PURPLE	Speedo Signal	Connect to VSS input on speedometer.

CONNECTOR C

CLOCK EXTENSION

This wire assembly will plug into your factory dash mounted clock.

YELLOW	Clock 12V battery power	Connect this wire onto the power stud on the back of your clock and to the Dash harness.

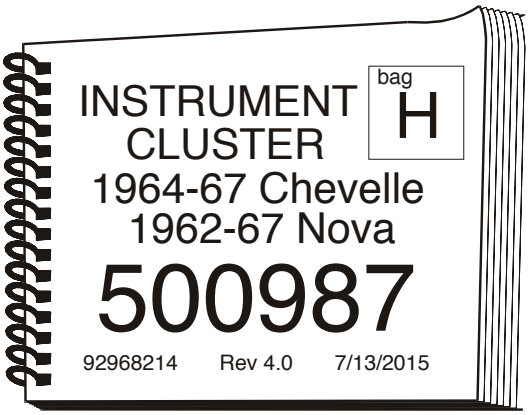

American Autowire
www.americanautowire.com 856-933-0801

Classic Update Series

How to install lamp sockets and lamp socket terminals.

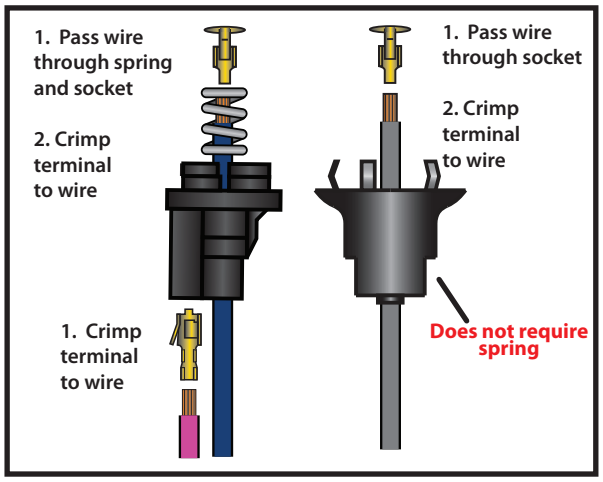

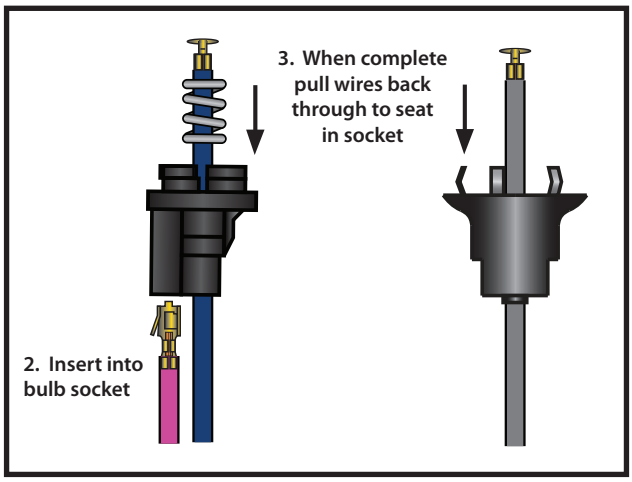

How to use the splice clip to join multiple wires.

Below is just an EXAMPLE of how to use the splice clip and shrink tubing, see your specific application on the following pages for actual splice information.

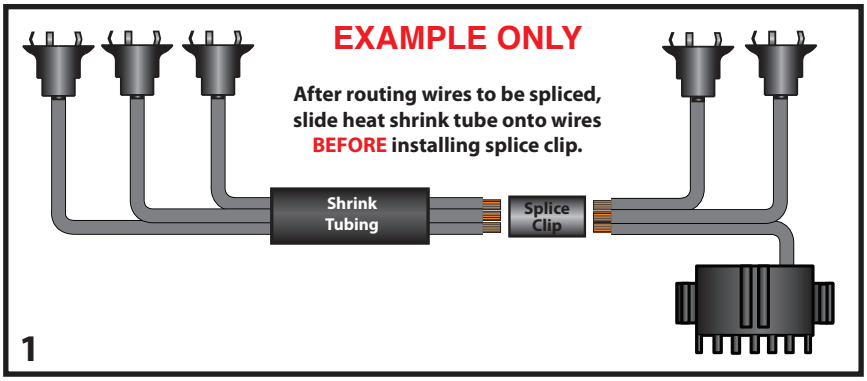

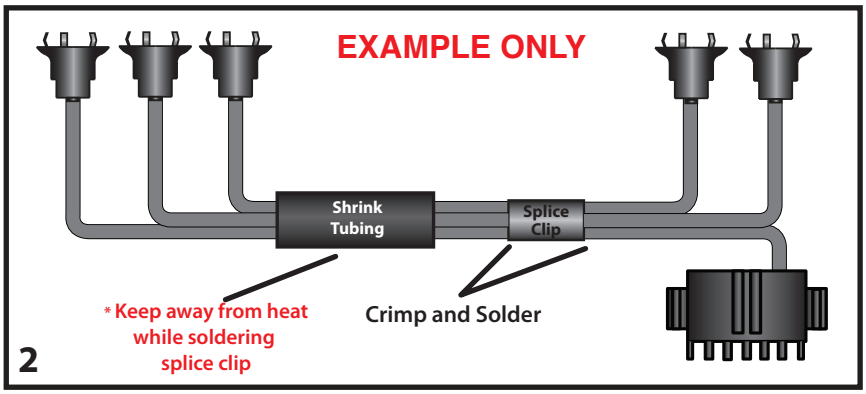

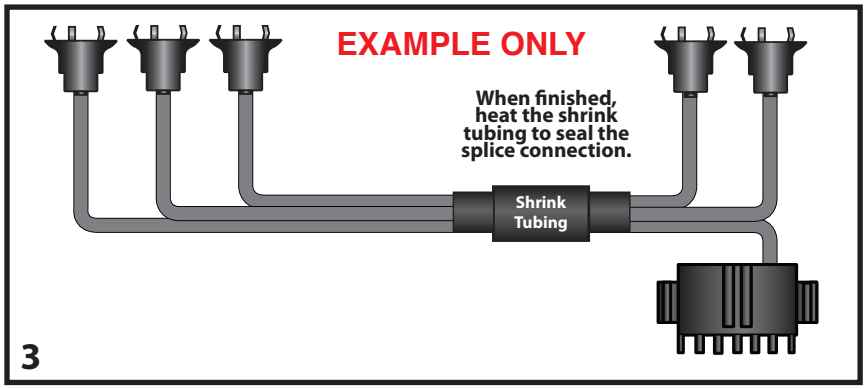

1964-65 Chevelle Warning Light Cluster Connections

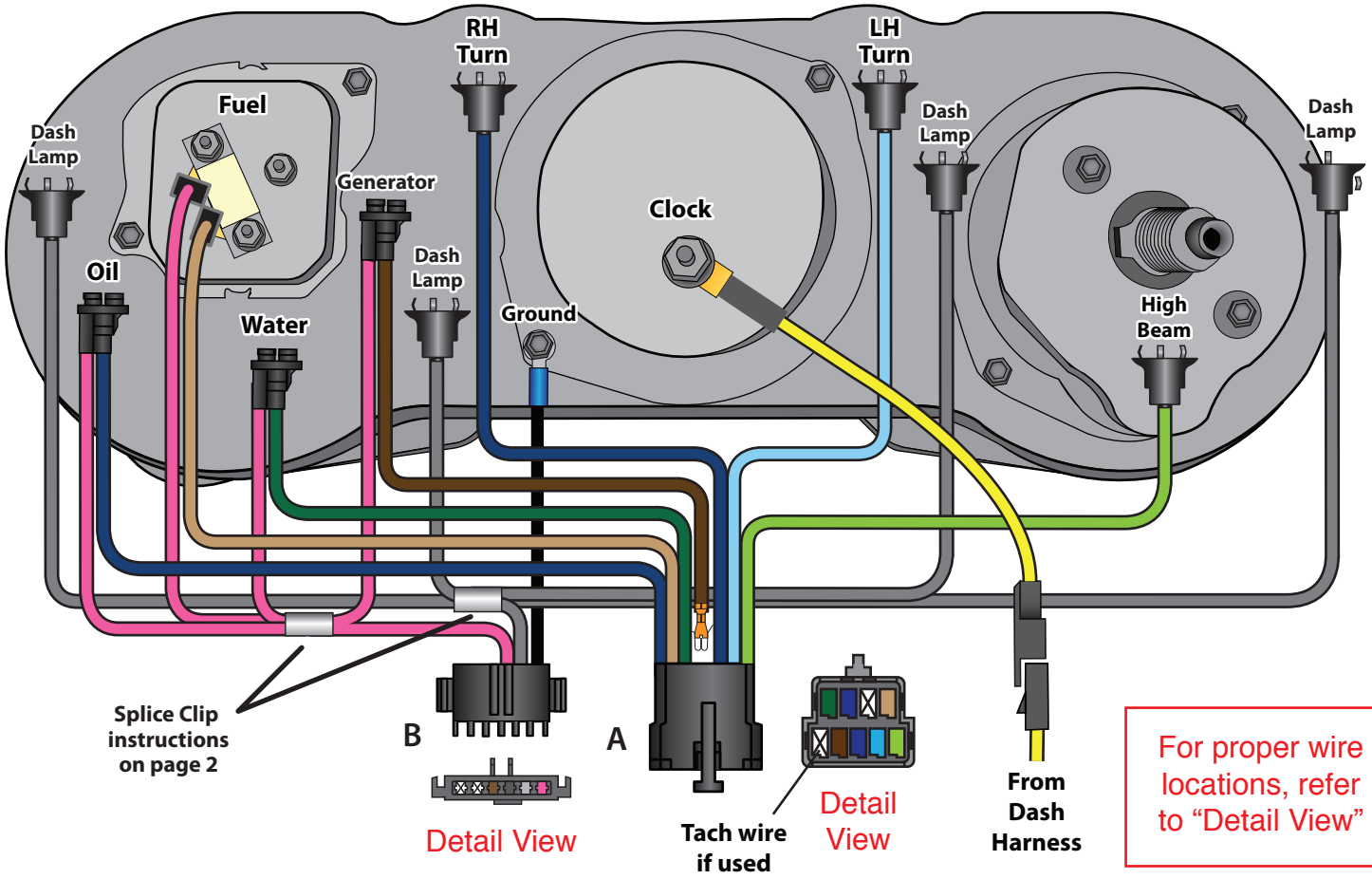

For proper wire locations, refer to "Detail View"

1964-65 Chevelle Gauge Cluster Connections

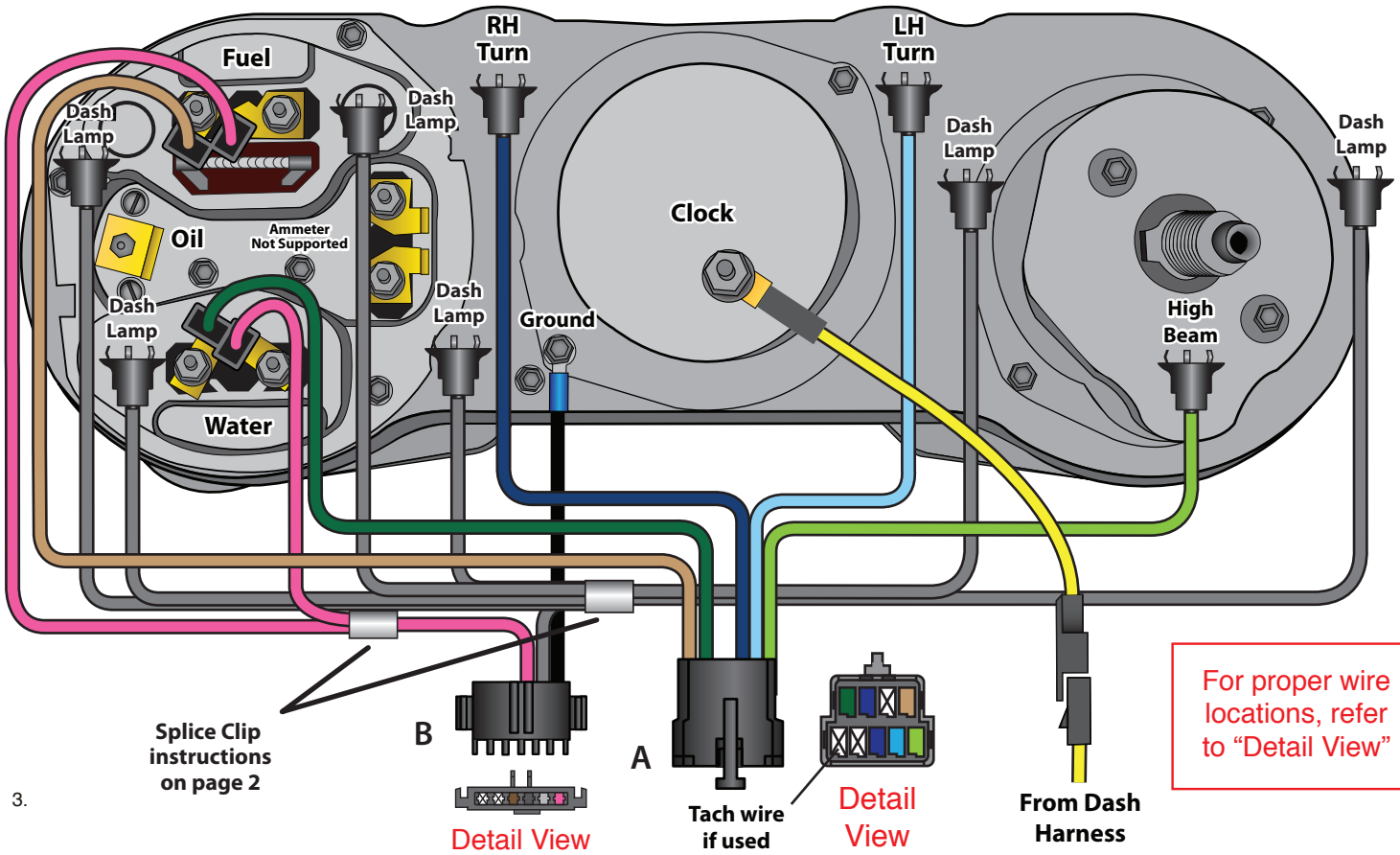

For proper wire locations, refer to "Detail View"

1966 Chevelle Warning Light Cluster Connections

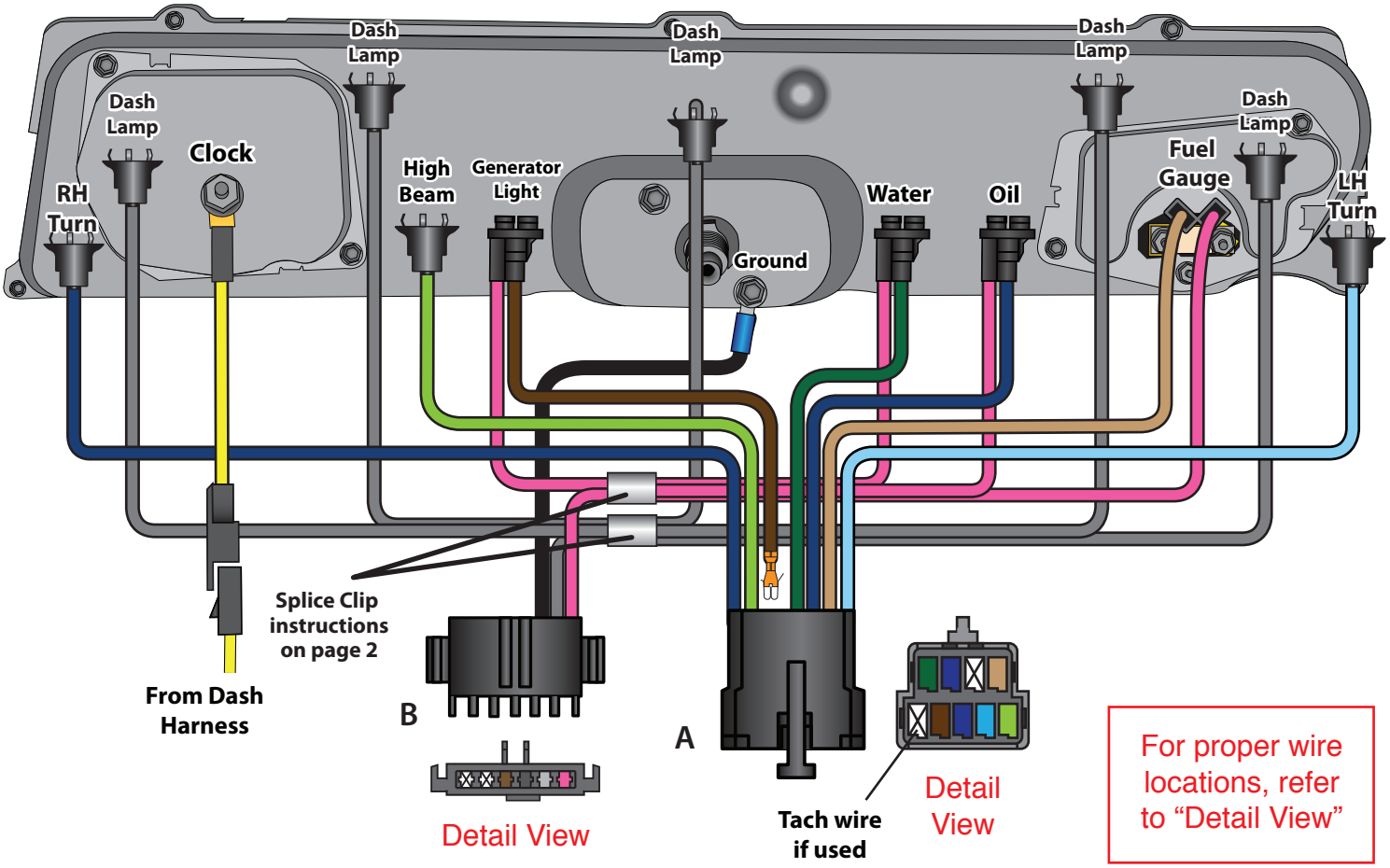

1966-67 Chevelle Gauge Cluster Connections

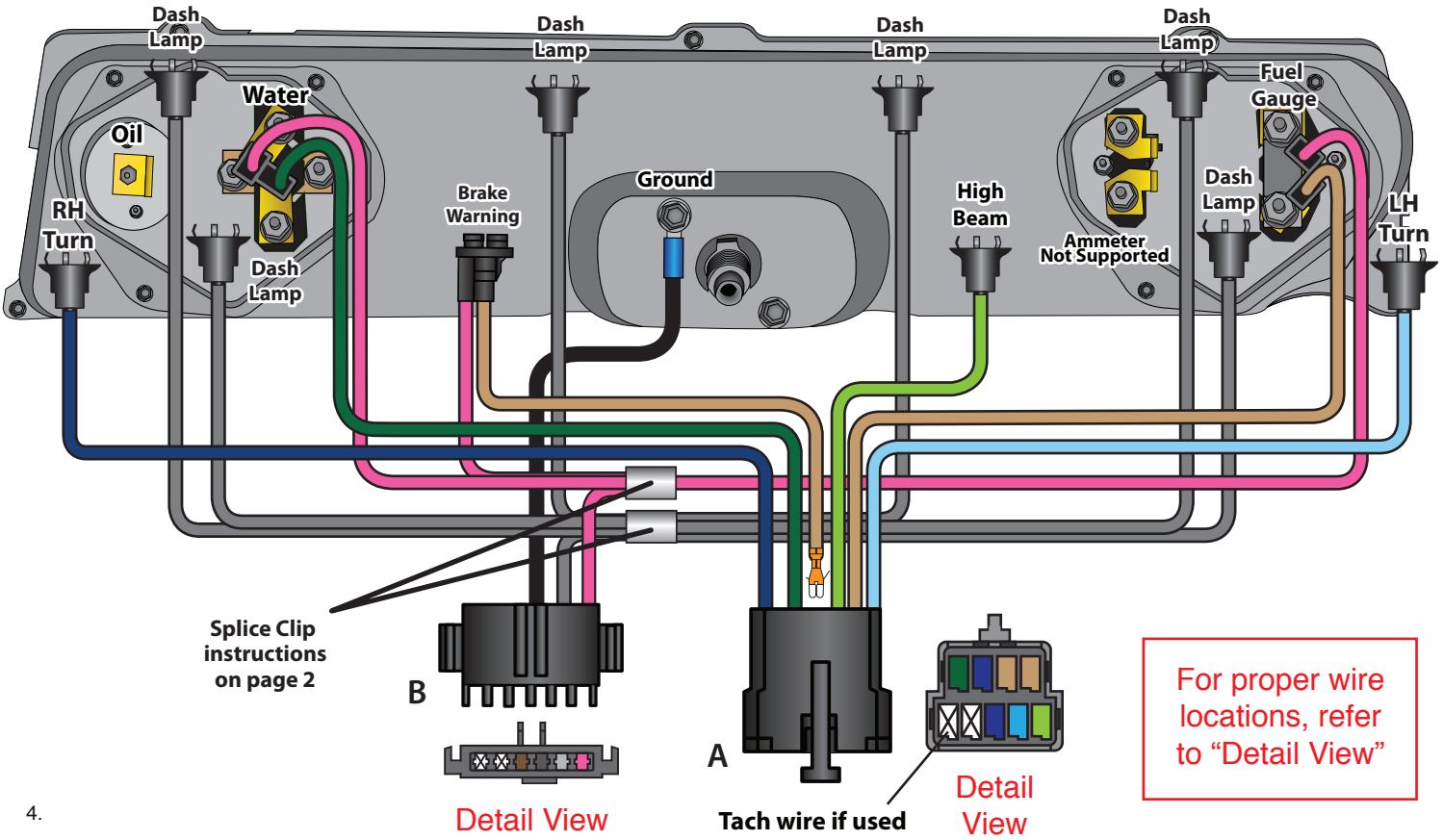

1967 Chevelle Warning Light Cluster Connections

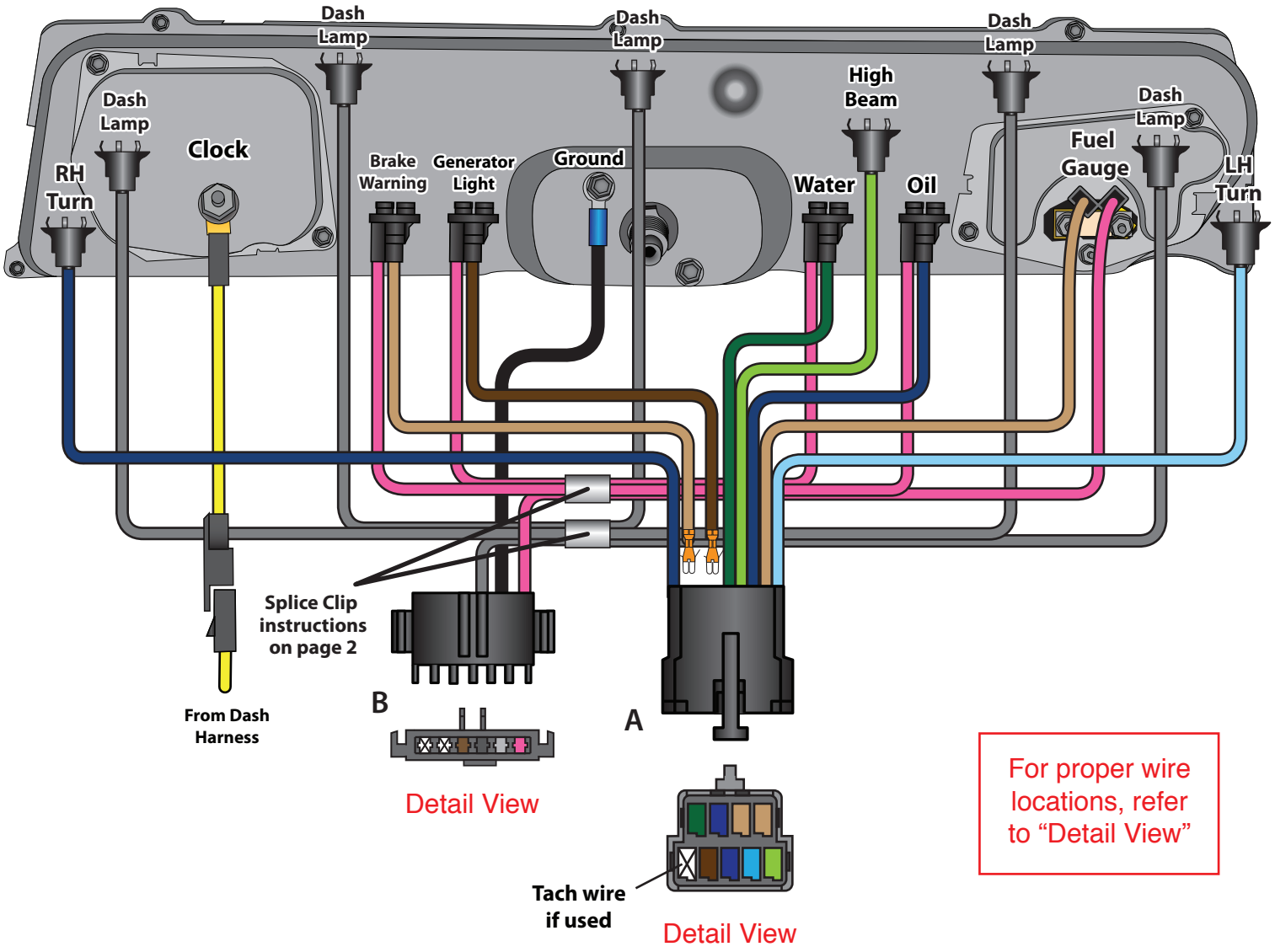

For proper wire locations, refer to “Detail View”

1962 Nova Warning Lights

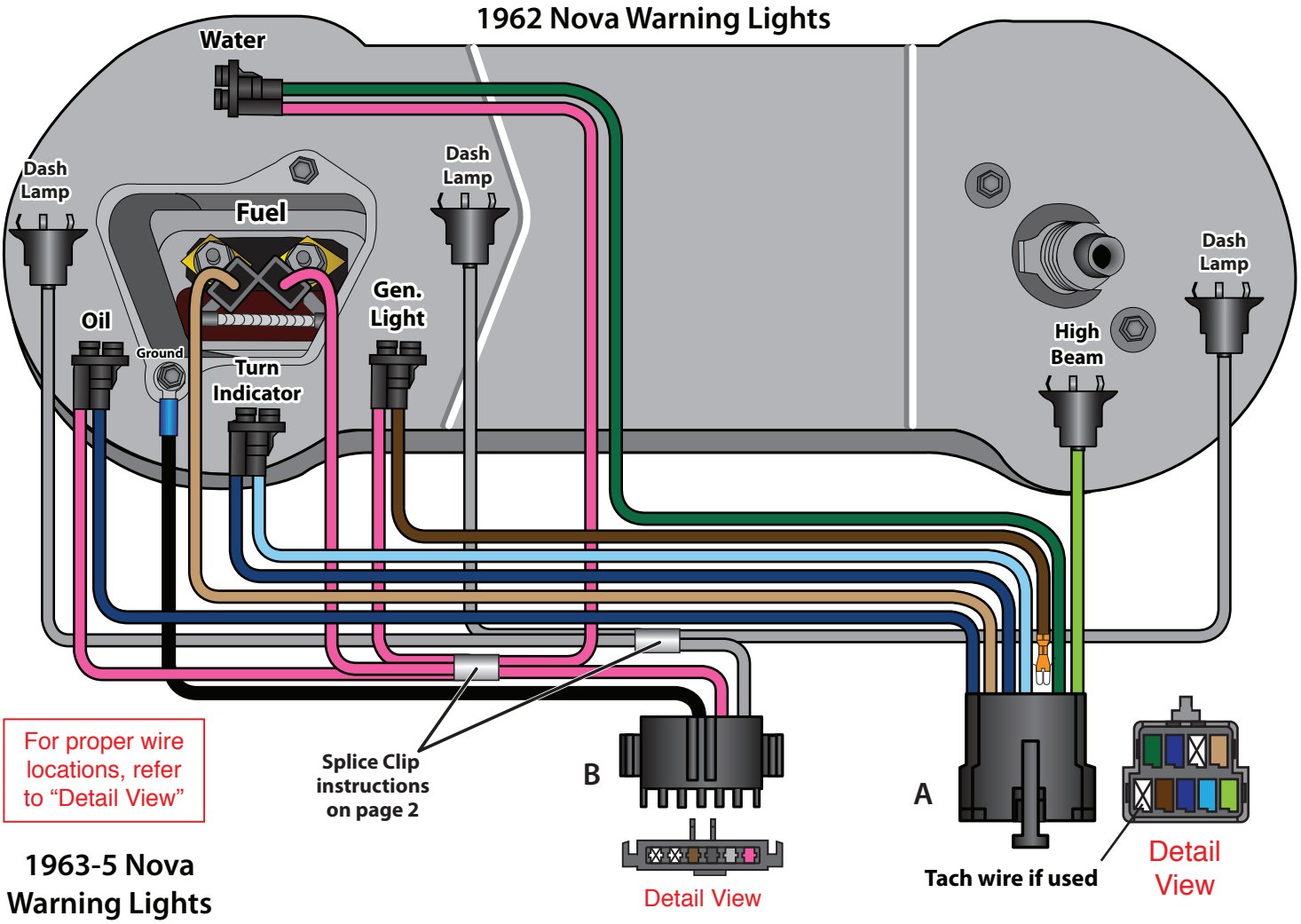

1963-5 Nova Warning Lights

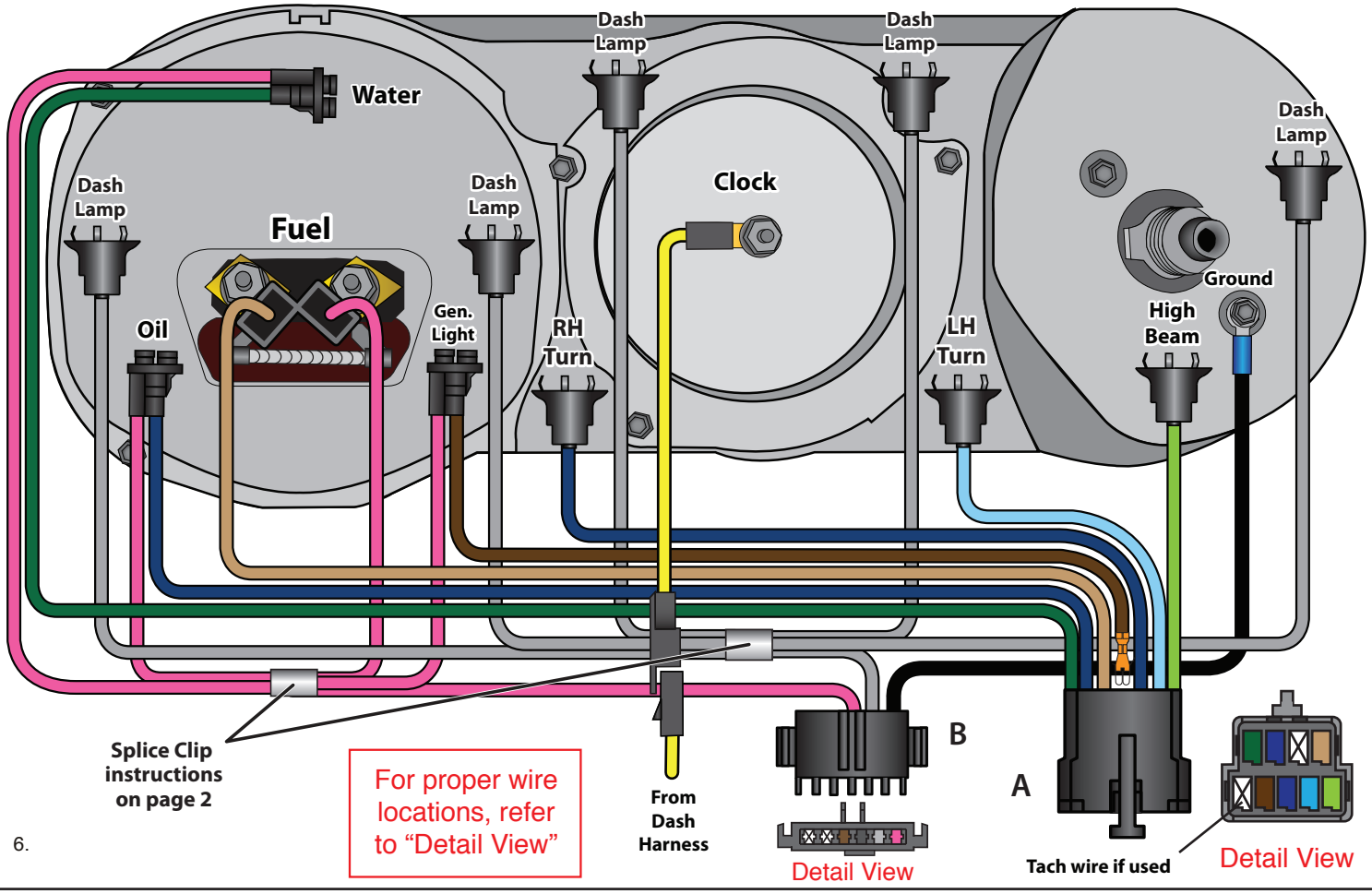

1963-5 Nova Gauges

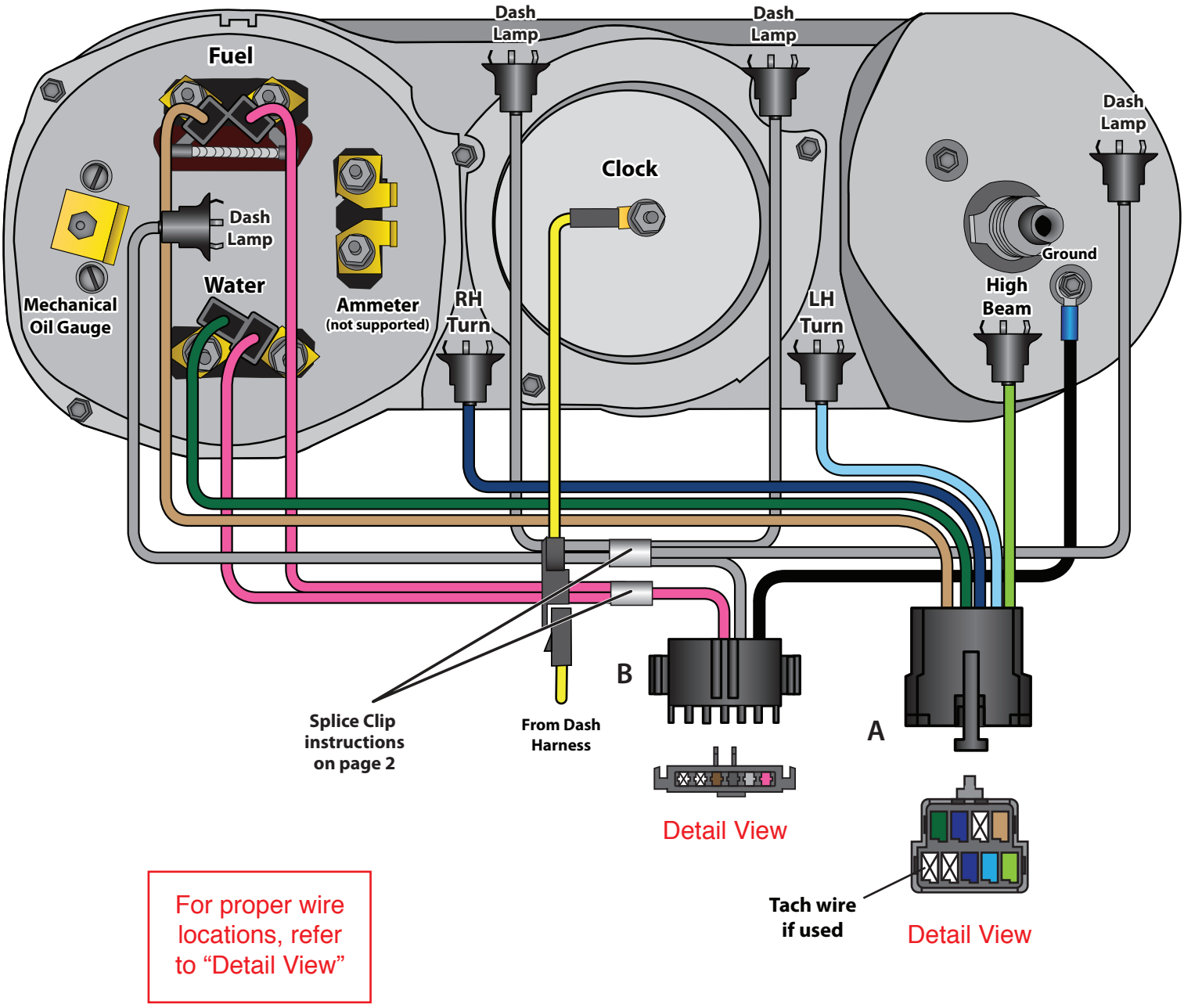

For proper wire locations, refer to “Detail View”

1966 Nova

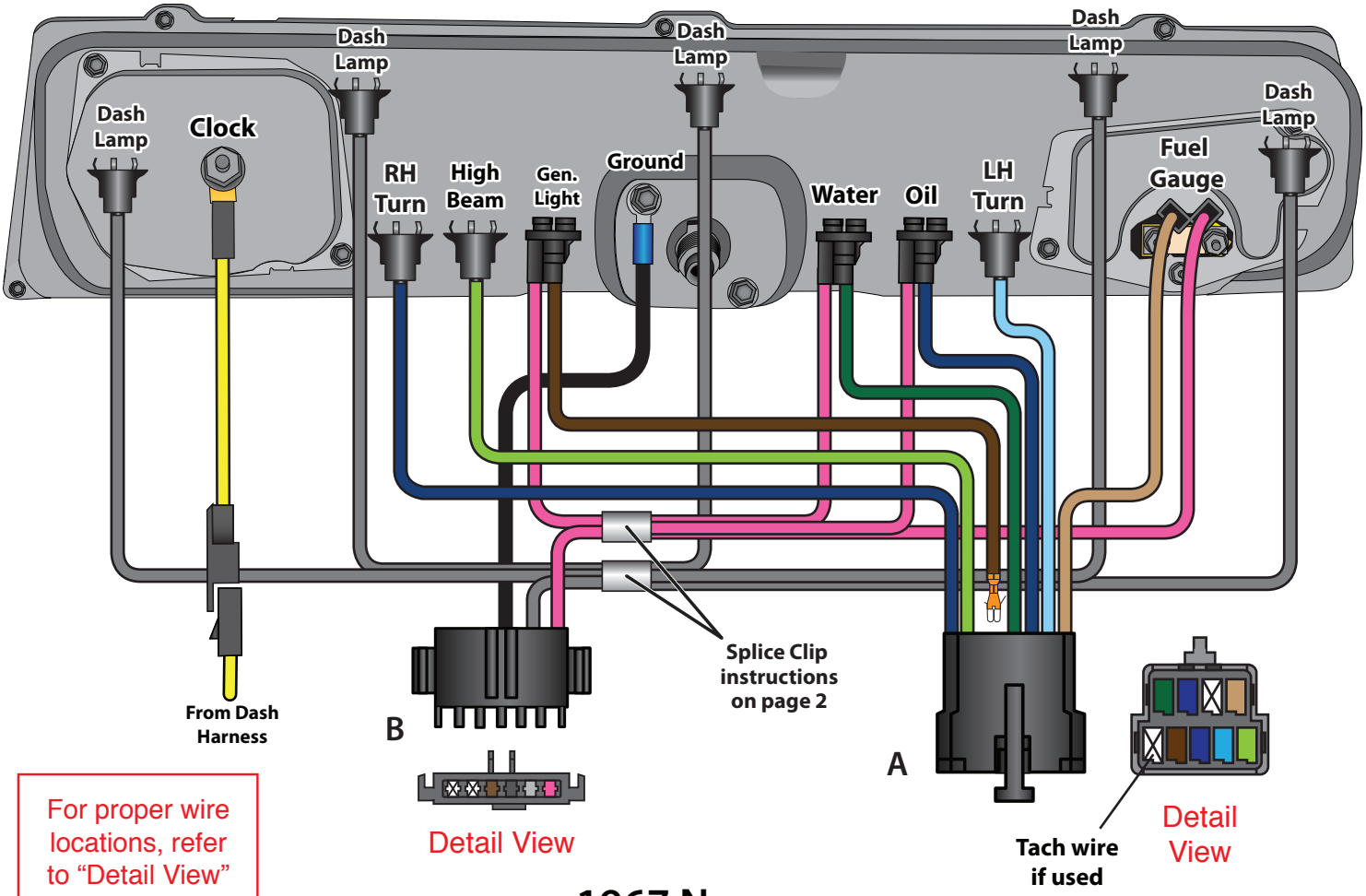

For proper wire locations, refer to "Detail View"

1967 Nova

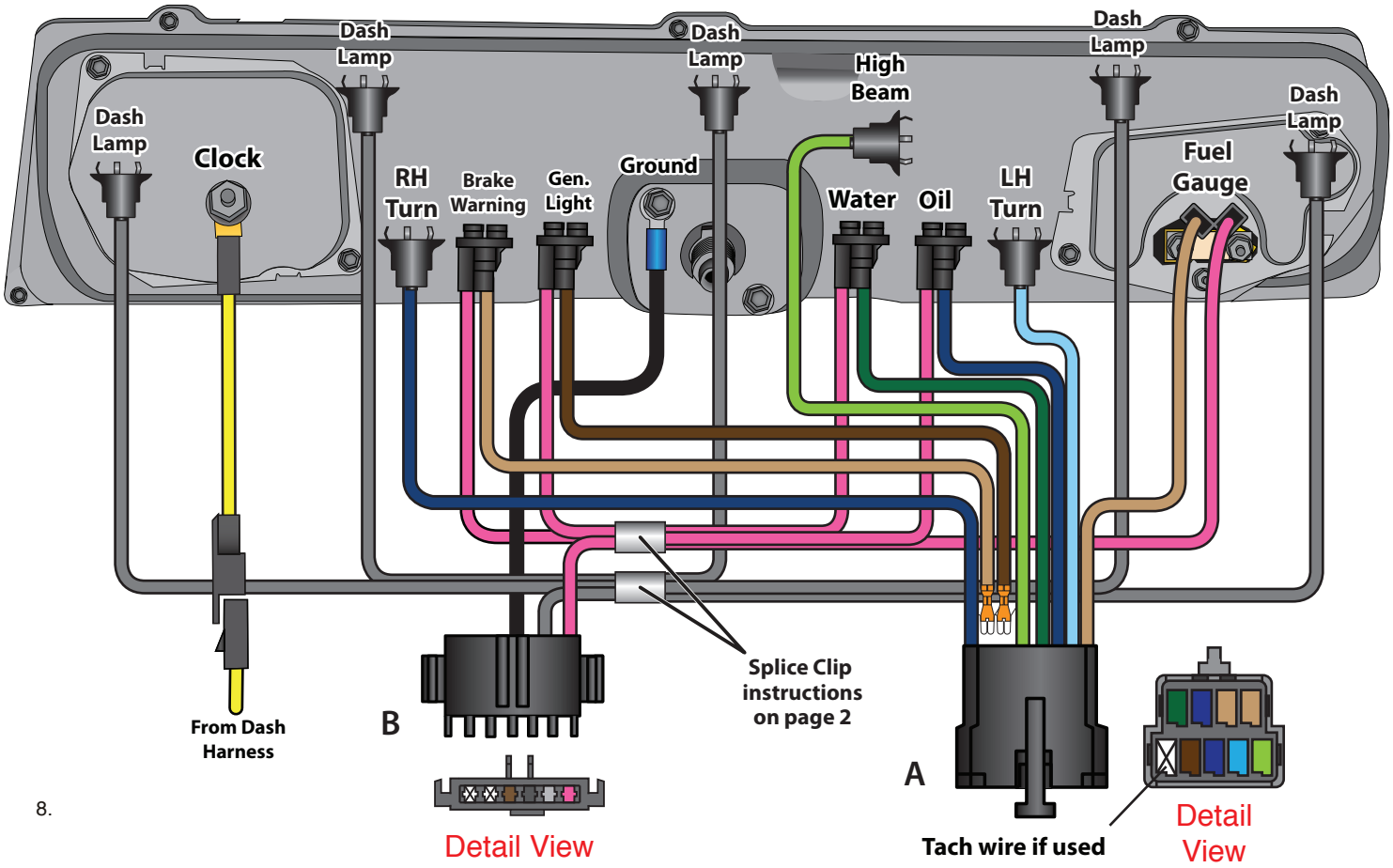

Classic Update Series

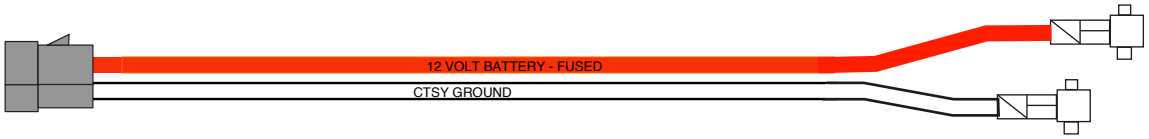

Console Rear Courtesy Lamp Extension (All Applications)

Automatic Transmission Console Shifter Light Harness (uses 1895 bulbs)

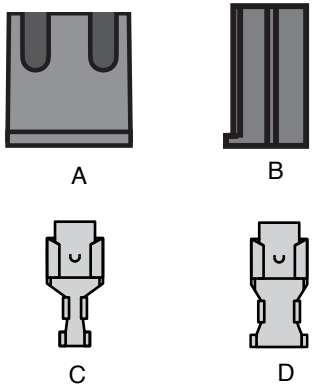

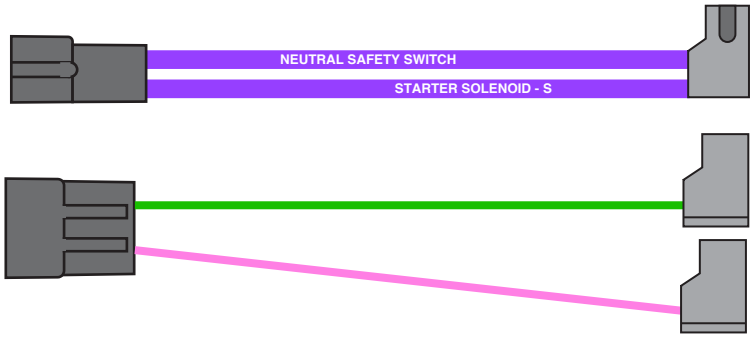

Automatic Transmission Console Neutral Safety Switch Extension

Automatic Transmission Console Back Up Lamp Switch Extension

American Autowire

www.americanautowire.com 856-933-0801

NOTE: In this kit, you will find:

1. All the necessary extension harnesses, terminals, and connectors that are required to complete the installation of your factory console to your new AAW dash harness.
2. All the necessary terminals, and connectors that are required to connect the NSS and Back Up lamp wires found at locations 12 and 13 on page 3 of your dash harness (510107 for 1970-72 or 510160 for 1968-69) instructions to your column mounted NSS/ Back up lamp switch (Automatic on the column), or clutch mounted NSS and column mounted back up lamp switch (Manual transmision).
3. Simply follow the assembly directions on page 2 of this instruction set.

Classic Update Series

1970-72 Chevelle
1968-69 Chevelle

bag K

Console Connection Kit

510112

92969185 Rev 2.0 6/15/2015

INSTALLATION DIRECTIONS

For Manual Transmission cars.

Console Courtesy lamp:

1. Plug this console rear lamp extension into the mating connector at location 17 on page 3 on your dash harness (510107 for 1970-72 or 510160 for 1968-69) instructions. Snap the lamp socket terminals into the original location at the back end of your console, then install your bulb (not included).

NSS and back up lamp switch connections:

2. Route the NSS and Back Up lamp wires found at locations 12 and 13 on page 3 of your dash harness (510107 for 1970-72 or 510160 for 1968-69) down to the base of the steering column near the firewall, and trim them to length.
3. For 1968 applications that did not use a NSS for manually shifted cars, you will need to connect these 2 purple wires together in order for the car to start. For 1969-72 applications that utilized a clutch pedal operated NSS, crimp terminals D onto the trimmed purple NSS dash wires, plug them into connector B, then plug this completed connection into your original clutch operated NSS extension (not included in this kit).
4. For 1968 applications that utilized a transmission mounted back up lamp switch, there should be a jumper harness with a rubber grommet molded onto one end of it that is snapped into your firewall with a 2-postion male connector on the opposite end. If you are missing this harness and switch, they may be purchased separately (CA70554 - harness; 01993307 - switch) from AAW. Take the light green and pink back up lamp wires from step 2 above, crimp terminals C onto the trimmed wires, plug them into connector A maintaining color continuity and function with the original jumper harness, then plug this completed connection into the 2-postion male connector from the jumper harness.
5. For 1969-72 applications that utilized a column mounted back up lamp switch, take the light green and pink back up lamp wires from step 2 above, crimp terminals C onto the trimmed wires, plug them into connector A in any order as indexing is not critical, then plug this completed connection onto the column mounted back up lamp switch.

For Console Shifted Automatic Transmission cars.

Courtesy lamp:

1. Plug the gray wire from the Automatic Transmission Console Shifter Light Harness into the open cavity on the Console Rear Courtesy Lamp Harness Extension. Snap the lamp socket terminals into the original location at the back end of your console, then install your bulb (not included).
2. Ground the ring terminals to the floor of the car in the stock location.
3. Plug the completed assembly into the mating connector at location 17 on page 3 on your dash harness (510107 for 1970-72 or 510160 for 1968-69) instructions.

NSS and back up lamp switch connections:

4. Select the “Automitic Transmission Console Neutral Safety Switch Extension” (as shown on page 1) and plug the 90 degree 2-postion connector containing the purple wires onto the NSS connection on your shifter assembly.
5. Select the “Automitic Transmission Console Back Up Lamp Switch Extension” (as shown on page 1) and plug each of the two 90 degree single postion connectors containing the pink and light green wires onto the back up connections on your shifter assembly.
6. Route the NSS and Back Up lamp wires found at locations 12 and 13 on page 3 of your dash harness (510107 for 1970-72 or 510160 for 1968-69) down to the NSS and back up lamp extesion harnesses that you just installed onto the shifter, and trim them to length.
7. For the purple NSS wires, crimp terminals D onto the trimmed wires, plug them into connector B maintaining function with the dash harness (Solenoid vs. Neutral Safety), then plug this completed connection into the NSS extension from step 4.
8. For the light green and pink back up lamp wires, crimp terminals C onto the trimmed wires, plug them into connector A maintaining color continuity and function with the dash harness (back up vs. fused 12v ign), then plug this completed connection into the back up lamp extension from step 5.

For Column Shifted Automatic Transmission cars.

NSS and back up lamp switch connections:

1. Route the NSS and Back Up lamp wires found at locations 12 and 13 on page 3 of your dash harness (510107 for 1970-72 or 510160 for 1968-69) down to the base of the steering column near the firewall, and trim them to length.
2. Take the 2 purple NSS wires, crimp terminals D onto the trimmed wires, plug them into connector B n any order as indexing is not critical, then plug this completed connection onto the switch at the base of your steering column.
2. Take the light green and pink back up lamp wires, crimp terminals C onto the trimmed wires, plug them into connector A in any order as indexing is not critical, then plug this completed connection onto the switch at the base of your steering column.

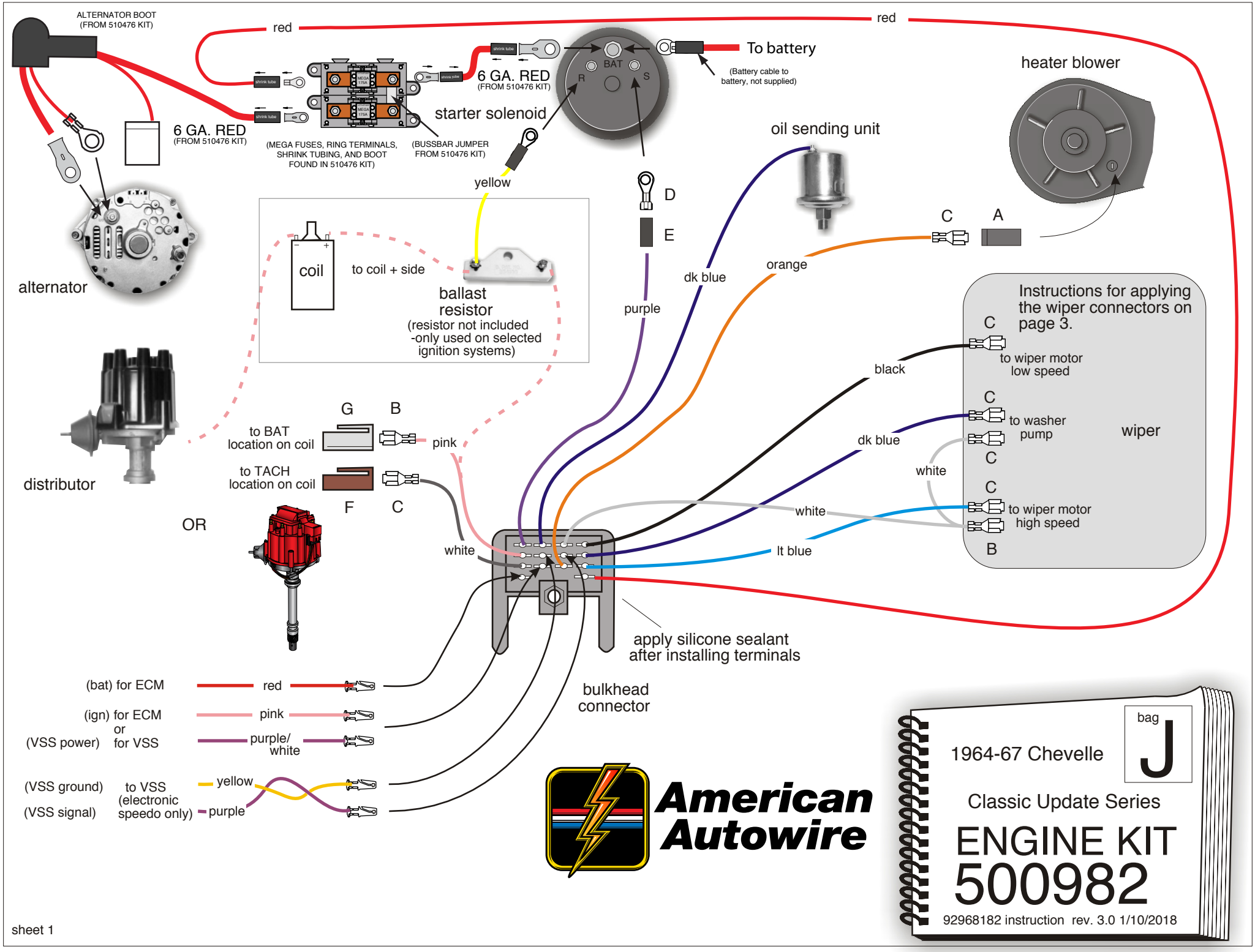
ALTERNATOR BOOT
(FROM 510476 KIT)
red
red
To battery
(Battery cable to battery, not supplied)
6 GA. RED
(FROM 510476 KIT)
6 GA. RED
(FROM 510476 KIT)
(MEGA FUSES, RING TERMINALS, SHRINK TUBING, AND BOOT FOUND IN 510476 KIT)
(BUSSBAR JUMPER FROM 510476 KIT)
starter solenoid
BAT
R
S
yellow
heater blower
oil sending unit
alternator
coil
to coil + side
ballast resistor
(resistor not included -only used on selected ignition systems)
D
E
purple
dk blue
orange
C
A
Instructions for applying the wiper connectors on page 3.
C
to wiper motor low speed
black
C
to washer pump
wiper
dk blue
C
white
C
to wiper motor high speed
B
distributor
G
B
to BAT location on coil
pink
to TACH location on coil
F
C
OR
white
white
lt blue
apply silicone sealant after installing terminals
bulkhead connector
(bat) for ECM
red
(ign) for ECM
or
(VSS power) for VSS
pink
purple/ white
(VSS ground)
(VSS signal)
to VSS (electronic speedo only)
yellow
purple
American Autowire
bag
J
1964-67 Chevelle
Classic Update Series
ENGINE KIT
500982
92968182 instruction rev. 3.0 1/10/2018
sheet 1

TEMPORARILY, PLUG THE MAIN BULKHEAD CONNECTOR FROM THIS KIT INTO THE MATING CONNECTOR ON THE DASH BULKHEAD CONNECTOR (LOCATED UNDER THE MASTER CYLINDER) Note: This will be unbolted to install the front light harness later.

BULKHEAD CONNECTOR WIRES:

RED	(12V BATTERY)	Route this wire to the Megafuse, cut to length, use the ring terminal and shrink tubing from the 510476 kit. Connect as shown on page 1.
PURPLE	(STARTER SOLENOID)	Route to the starter solenoid and cut to length. Install rubber sleeve E and ring D. Connect to the 'S' terminal on solenoid.
DK BLUE	(OIL PRESSURE SENDER)	Connect this wire to the oil pressure sending unit. Using terminal P or terminal C with connector A.
ORANGE	(HEAT / AIR)	If using after-market air conditioning, remove this wire. If using a stock heater only system, route this wire to the heater blower, cut to length. Install terminal C and connector A and plug into the blower unit.
PINK	(12V IGNITION)	If using an HEI distributor, or after-market ignition system which requires a 12V feed: Route the PINK wire to the coil and trim to length. Install terminal C and connector G, and plug into distributor cap BAT location. If using a points type ignition system which required reduced voltage: Route the PINK wire to the ignition feed side of the ballast resistor. Connect the loose piece YELLOW wire to the R terminal on the starter and connect the other end to the coil side of the ballast resistor (not included). Connect a piece of left over PINK wire to the coil side of the ballast resistor and route the to the distributor coil + side.
WHITE	(COIL-TACH)	Route this wire to he coil and trim to length. if using an HEI distributor, terminal B and connector F are included for connection. Plug into the TACH location or negative side of coil..

ALTERNATOR

HEAVY RED	(AMERICAN AUTOWIRE)	Use the 6ga red wire, boot and ring terminal from the 510476 kit, route from the alternator to the Megafuse, cut to length. Connect as shown on page 1 of this instruction set and on the 92972153 (510476) instruction set.
SMALL RED		Send the ring terminal end of this wire through boot L (as shown on sheet 1) and connect to the battery stud on alternator. Do not plug the connector into the alternator yet. The exciter wire will be added when the front light wires are install.

REMAINING LOOSE WIRES: These wires will be used only if you are using and ECM module which is located in the engine compartment, or if you are using and electronic speedometer.

RED	(12V BATTERY)	Used on ECM module which is mounted in the engine compartment. Plug this wire into the firewall bulkhead connector, at the location shown on sheet 1. Route the other end to the ECM harness, battery feed in.
PINK	(12V IGNITION)	Used on ECM module which is mounted in the engine compartment. Plug this wire into the firewall bulkhead connector, at the location shown on sheet 1. Route the other end to the ECM harness, ignition feed in

PURPLE Used on vehicles which have an electronic speedometer. Route this wire to the vehicle speed sensor and connect to the signal lead.

YELLOW Used on vehicles which have an electronic speedometer. Twist this wire with the purple wire above to assure proper shielding. Connect this wire to the vehicle speed sensor ground lead.

Once the main connector has all of it's wires plugged in, the connector cavities should be sealed with di-electric grease on the terminals. Also, to assure a moisture resistant seal, silicone can be applied to seal the outside of the connector.

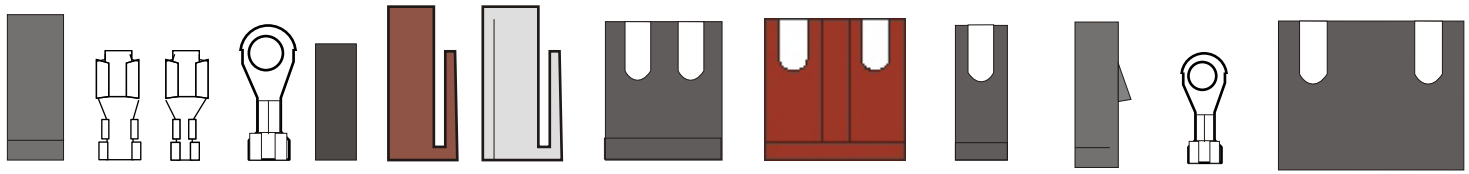

ENGINE KIT

500982

92968182 instruction rev. 3.0 1/10/2018

The following wires are for use on a stock wiper system. If using an after-market wiper system, follow the manufacturer's instructions.

BLACK	(WIPER LOW SPEED)	Route to the wiper motor and trim to length. Install terminal C.
DK BLUE	(WIPER WASHER)	Route this wire to the wiper motor and trim to length. Install terminal C.
LT BLUE	(WIPER HI SPEED)	Route this wire to the wiper motor and trim to length. Install terminal C.
WHITE	(WIPER ACC)	Route this wire to the wiper motor and trim to length. Using terminal B, double and solder with the cut off portion and install terminal C on the end of the cut off portion.

Use the drawings and photos below to install the appropriate connectors for your application.

64-65 Single Speed with washer

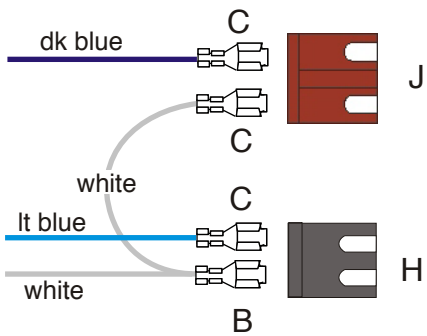

66-67 Chevelle All

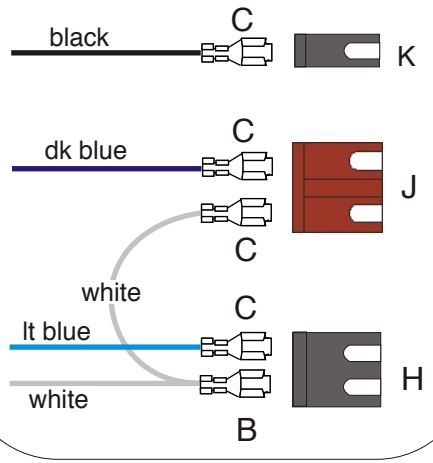

66-67 Chevelle 2 spd. connection

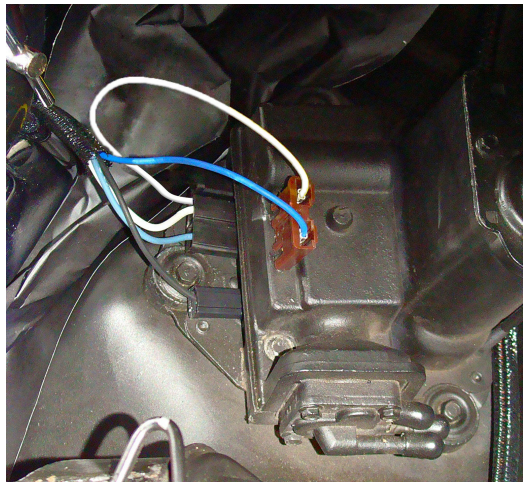

64-65 2 Speed with washer

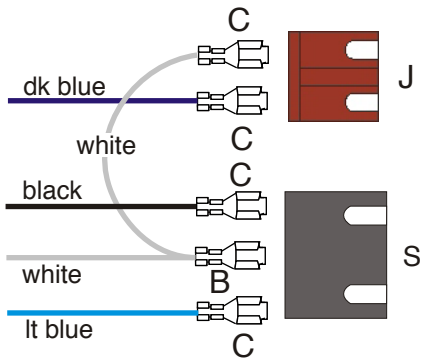

64-65 Chevelle 2 spd. connection

NOTE: The black with yellow stripe wire in the photo is the same as the AAW white wire.

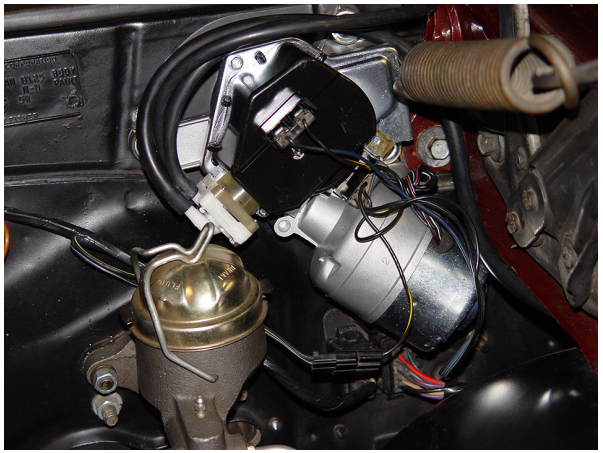

ENGINE KIT

500982

92968182 instruction rev. 3.0 1/10/2018

THIS PAGE HAS BEEN
INTENTIONALLY LEFT BLANK

ENGINE KIT
500982
92968182 instruction rev. 3.0 1/10/2018

Classic Update Series

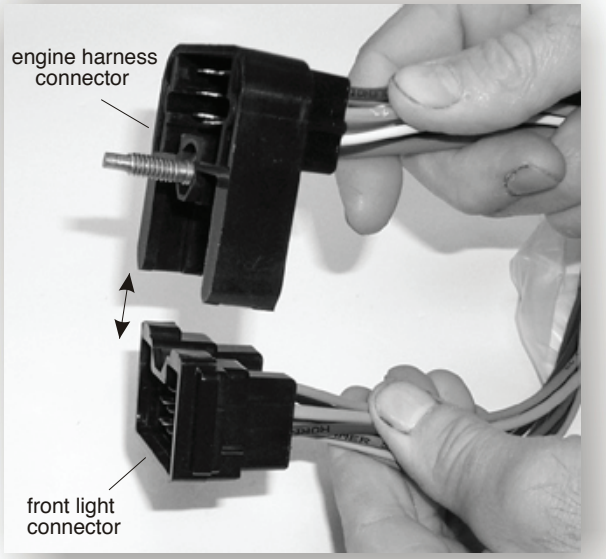

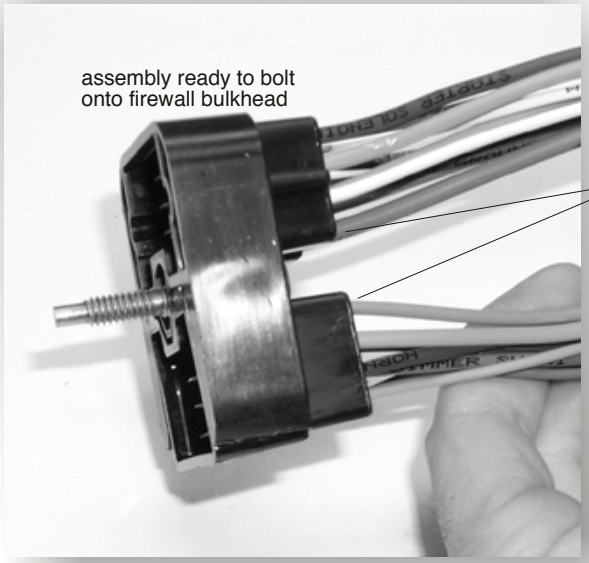

apply silicone sealant
to back side of connector
after installing terminals

The bulkhead connector from this front light kit must snap into the mating engine connector (bag J), as shown.
After snapping together, then bolt the assembly into the dash harness firewall connector using the attached bolt.

Look!

American Autowire
800-482-9473

American Autowire also sells factory OEM style harness wrap. this is the same stuff used on original Camaro harnesses! If you want that OEM look with your Classic Update wiring system, then give us a call and order p/n R0067108 !

Classic Update Series

bag
L

FRONT LIGHT KIT

500980

92968173 instruction rev 1.0 7/7/2009

Classic Update Series

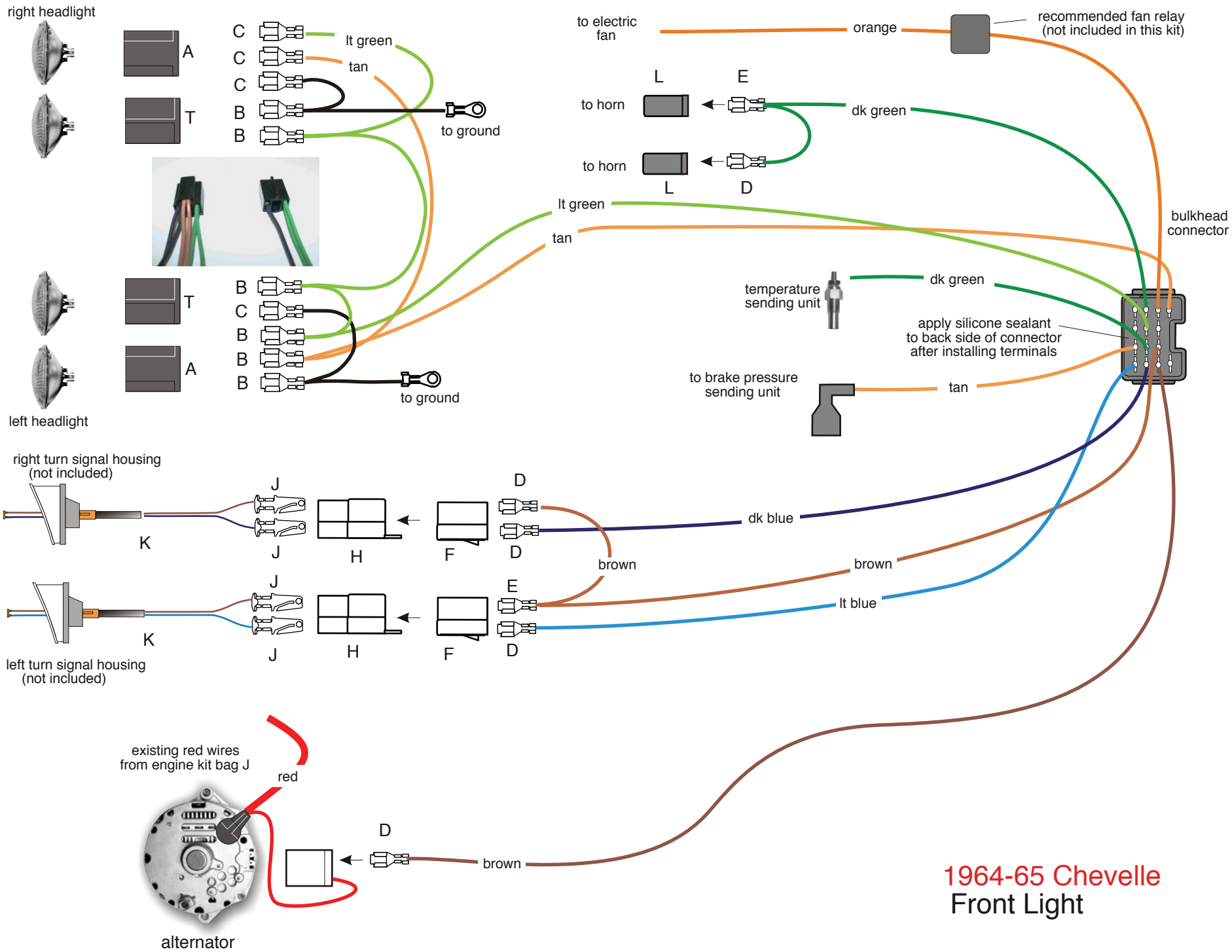

1964-65 Chevelle
Front Light

92968173 instruction rev 1.0 7/7/2009

sheet 2

Classic Update Series

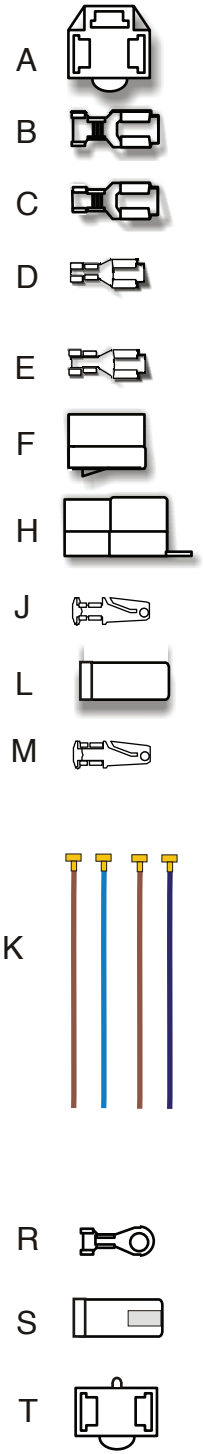

1964-65 Chevelle Front Lighting

Connect the bulkhead connector from this kit onto the bulkhead connector from the engine kit (bag J), and bolt to the firewall dash bulkhead.

PARKING LAMP WIRES

LT BLUE	LH turn	Route this wire to the LH turn signal lamp and install terminal D and plug into connector F, as shown on sheet 2.
DK BLUE	RH turn	Route this wire to the RH turn signal lamp and install terminal D and plug into connector F, as shown on sheet 2.
BROWN	Parking Lamp	Route this wire to the LH turn signal lamp and cut to length. Double this wire with the cut off portion, and install terminal E, plug into connector F along with the LT BLUE wire above. Route the remaining portion of the brown wire to the RH turn signal lamp, cut to length, install terminal D and plug into connector F, along with the DK BLUE wire above.

NOTE: The running and directional light assemblies use factory parking lamp housing assemblies. To install them, plug connector H (on the wires above) onto the factory parking lamp housing assemblies. Replacement wires (K), terminals (D) and connectors (F) are provided in the event that the housings need repair. Repeat for both front parking lamps.

FRONT LIGHT WIRING

TAN (heavy gauge)	Lo Beam	Route this wire to the driver side outer headlight and trim to length. Double this wire with the cutoff portion, and install terminal B. Plug this terminal into connector A, in the location shown on sheet 2. Route the remaining portion of this TAN wire to the passenger side outer headlight and trim to length. Install terminal C and plug into connector A as shown on sheet 2.
LT GREEN	Hi Beam	Route this wire to the driver side outer headlight and trim to length. Double this wire with the cutoff portion, and install terminal B. Plug this terminal into connector A, make a short jumper over to the driver side inner headlight, cut to length,double it with the cutoff portion, install terminal B, and plug it into connector T in the location shown on sheet 2. Route the remaining portion of this LT GREEN wire to the passenger side inner headlight and trim to length. Double this wire with the cutoff portion, install terminal B and plug into connector T as shown. Make a short jumper over to the passenger side outer headlight, cut to length, double it with the cutoff portion, install terminal C, and plug it into connector A in the location shown on sheet 2.
BLACK	Ground	Route this wire to the driver side outer headlight and trim to length. Double this wire with the cutoff portion, and install terminal B. Plug this terminal into connector A, take the short jumper over to the driver side inner headlight, cut to length, install terminal C, and plug it into connector T in the location shown on sheet 2. Repeat this process for the passenger side.
DK GREEN	Horn	Route to horns and install terminals D & E, as shown on sheet 2, Plug into connectors L.

.

92968173 instruction rev 1.0 7/7/2009

1964-65 Chevelle Front Lighting

ORANGE	Electric Fan	NOTE: We recommend that this wire be used as the trigger wire for the electric fan relay.
TAN (small gauge)	Brake Sender	Plug this wire into the stock brake sender switch. (1967 only)
DK GREEN	Water Temp	Connect this wire to the temperature sending unit using terminal R or terminal D and connector S (depending on your sending unit).
BROWN	Alternator Regulator	Route this wire to the alternator and cut to length. Install terminal D and plug into the regulator connector (previously installed from the engine kit 500982 bag J).

NOTE: This wire is only used on an alternaotr with an internal regulator which uses an exciter wire. If you are using a true one wire alernator, then this BROWN wire can be removed and not used.

After all wires are installed from this kit, the main connector should have die-electric grease applied to the terminals. Also, to assure a moisture resistance seal, apply silicone sealant to the outside of the main connector around each wire.

Classic Update Series

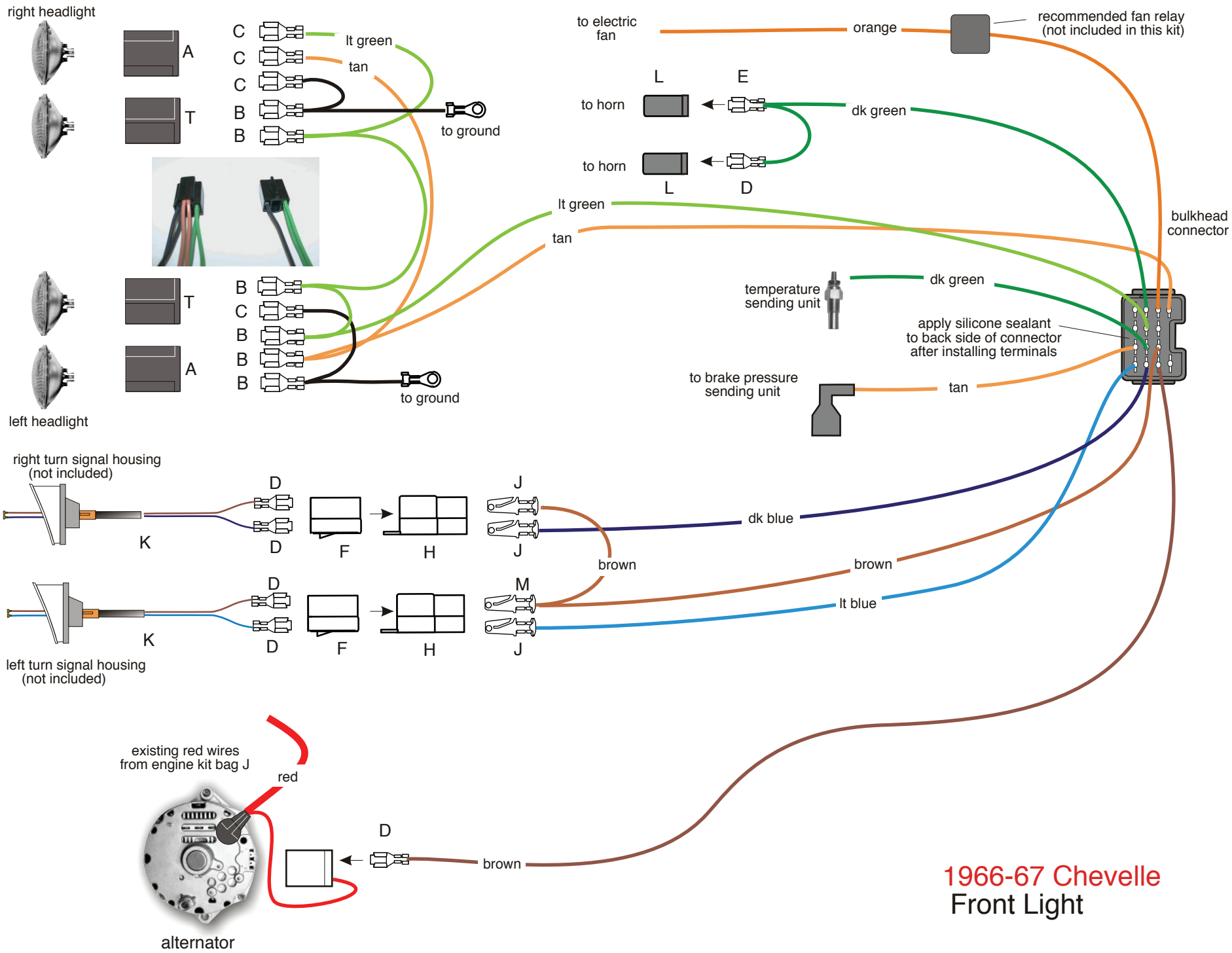

1966-67 Chevelle
Front Light

92968173 instruction rev 1.0 7/7/2009

Classic Update Series

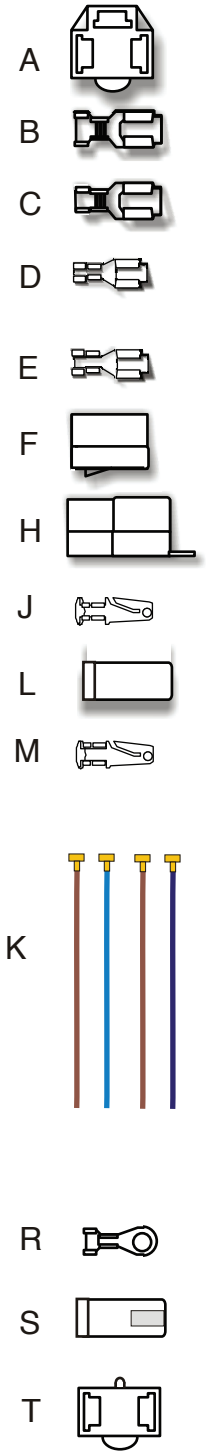

1966-67 Chevelle Front Lighting

Connect the bulkhead connector from this kit onto the bulkhead connector from the engine kit (bag J), and bolt to the firewall dash bulkhead.

PARKING LAMP WIRES

LT BLUE	LH turn	Route this wire to the LH turn signal lamp and install terminal J and plug into connector H, as shown on sheet 5.
DK BLUE	RH turn	Route this wire to the RH turn signal lamp and install terminal J and plug into connector H, as shown on sheet 5.
BROWN	Parking Lamp	Route this wire to the LH turn signal lamp and cut to length. Double this wire with the cut off portion, and install terminal M, plug into connector H along with the LT BLUE wire above. Route the remaining portion of the brown wire to the RH turn signal lamp, cut to length, install terminal J and plug into connector H, along with the DK BLUE wire above.

NOTE: The running and directional light assemblies use factory parking lamp housing assemblies. To install them, plug connector H (on the wires above) onto the factory parking lamp housing assemblies. Replacement wires (K), terminals (D) and connectors (F) are provided in the event that the housings need repair. Repeat for both front parking lamps.

FRONT LIGHT WIRING

TAN (heavy gauge)	Lo Beam	Route this wire to the driver side outer headlight and trim to length. Double this wire with the cutoff portion, and install terminal B. Plug this terminal into connector A, in the location shown on sheet 5. Route the remaining portion of this TAN wire to the passenger side outer headlight and trim to length. Install terminal C and plug into connector A as shown on sheet 5.
LT GREEN	Hi Beam	Route this wire to the driver side outer headlight and trim to length. Double this wire with the cutoff portion, and install terminal B. Plug this terminal into connector A, make a short jumper over to the driver side inner headlight, cut to length,double it with the cutoff portion, install terminal B, and plug it into connector T in the location shown on sheet 5. Route the remaining portion of this LT GREEN wire to the passenger side inner headlight and trim to length. Double this wire with the cutoff portion, install terminal B and plug into connector T as shown. Make a short jumper over to the passenger side outer headlight, cut to length, double it with the cutoff portion, install terminal C, and plug it into connector A in the location shown on sheet 5.
BLACK	Ground	Route this wire to the driver side outer headlight and trim to length. Double this wire with the cutoff portion, and install terminal B. Plug this terminal into connector A, take the short jumper over to the driver side inner headlight, cut to length, install terminal C, and plug it into connector T in the location shown on sheet 5. Repeat this process for the passenger side.
DK GREEN	Horn	Route to horns and install terminals D & E, as shown on sheet 5, Plug into connectors L.

.

92968173 instruction rev 1.0 7/7/2009

1966-67 Chevelle Front Lighting

ORANGE	Electric Fan	NOTE: We recommend that this wire be used as the trigger wire for the electric fan relay.
TAN (small gauge)	Brake Sender	Plug this wire into the stock brake sender switch. (1967only)
DK GREEN	Water Temp	Connect this wire to the temperature sending unit using terminal R or terminal D and connector S (depending on your sending unit).
BROWN	Alternator Regulator	Route this wire to the alternator and cut to length. Install terminal D and plug into the regulator connector (previously installed from the engine kit 500982 bag J).

NOTE: This wire is only used on an alternaotr with an internal regulator which uses an exciter wire. If you are using a true one wire alernator, then this BROWN wire can be removed and not used.

After all wires are installed from this kit, the main connector should have die-electric grease applied to the terminals. Also, to assure a moisture resistance seal, apply silicone sealant to the outside of the main connector around each wire.

A (1)

(144.0” 6 Gauge charge wire)

B (2)

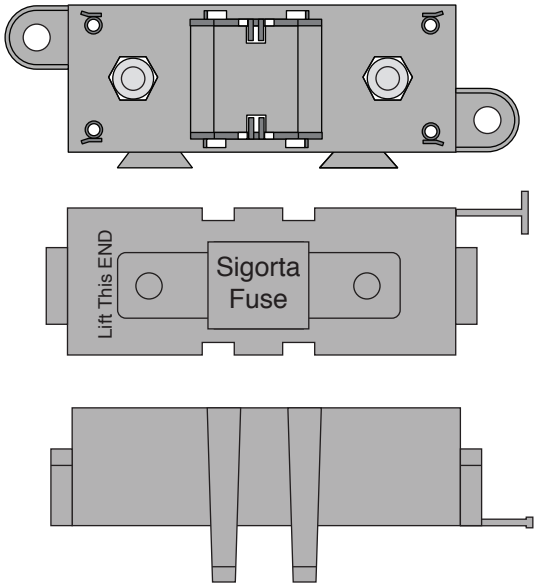

(Megafuse body, cover and two M8 x 1.25 nuts / lock washers)

C (2)

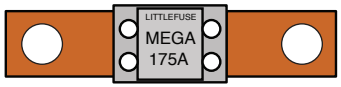

(175 amp Megafuse)

D (1)

(Megafuse jumper)

E (1)

(Alternator boot)

F (1)

(cut into six 1.0” pieces)

1. One this page, you will find the wire, fuse bodies, fuses, boot, ring terminals, and shrink tubing (items A through K) that are necessary to connect your alternator and main power feed for your new AAW wiring kit. Please be sure that all of the necessary components are present before starting this portion of your installation. If anything is missing, stop what you are doing and contact AAW at the number listed below right away.

2. On page 2, you will find directions for building the 2 Megafuse assemblies (items B,C and D) into one unit.

3. On page 3, you will find an overall concept of how to connect the Megafuse assemblies to your starter solenoid, alternator and main power feed of your new wiring system.

4. On page 4, you will find tips on building your charging circuit wires and assembling them and the main panel power feed wire to the Megafuse assembles.

G (2)

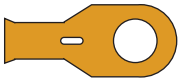

(6Ga. starter ring terminal)

H (3)

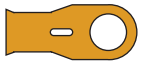

(6Ga. megafuse terminal)

J (2)

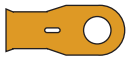

(6Ga. alternator terminal)

K (2)

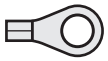

(10Ga. megafuse terminal)

American Autowire

www.americanautowire.com 856-933-0801

PART # 510476 Z

DESCRIPTION:

Alternator and Main Power Connection Kit Various Applications

92972153 instruction sheet rev 0.1 6/24/2019

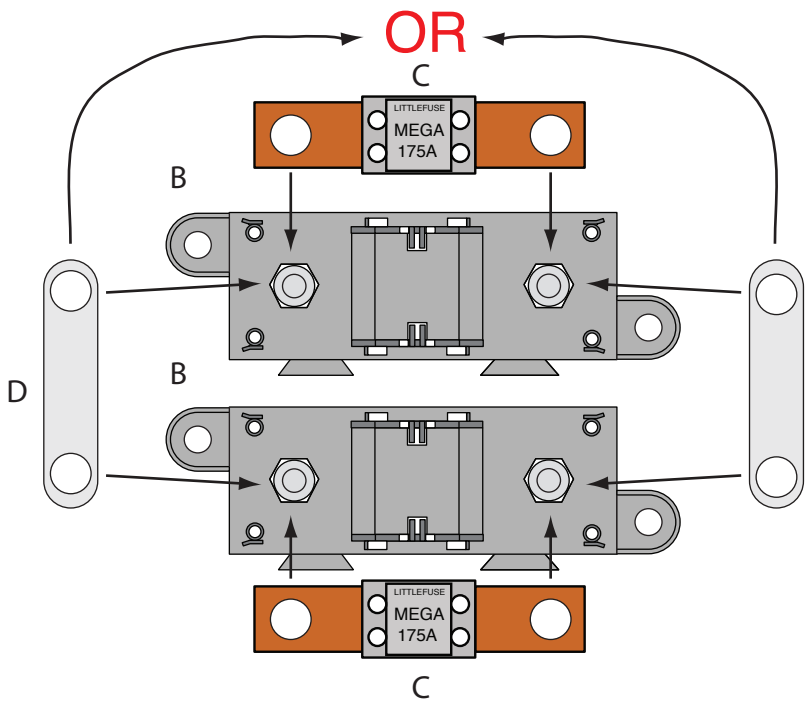

Assembling the (2) Megafuse assemblies

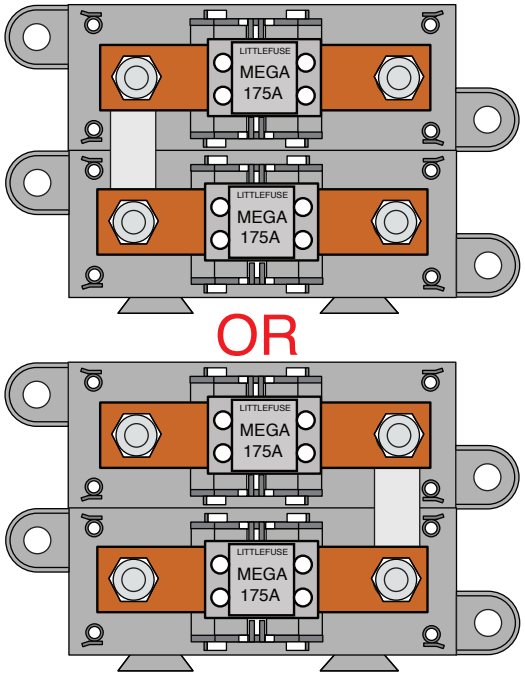

Assembled Megafuses

NOTE: Find a suitable place, as close to the battery power source as possible, under the hood of the your vehicle to mount the completed Megafuse assemblies. Keep in mind that you have 12 feet of 6Ga. charging wire, and that the main power feed coming from your panel or bulkhead connection must also be able to reach the assembly.

1.Take the two Megafuse bodies and covers (items B) and snap them together. Remove the 4 nuts and lock washers from the studs on the fuse body assemblies.

2. Install the Megafuse jumper (item D above) over two of the studs on the Megafuse bodies. It is very important that the jumper MUST BE assembled on the side that is going to connect to your main power connection (starter solenoid or battery feed).

3. Notch top cover to clear jumper D as shown at right.

4. Snap one 175amp fuse (items C) onto the studs of each of the two Megafuse bodies (items B), over the jumper, then loosely re-attach the 4 nuts and lock washers back onto the assembled Megafuses. The fuse assemblies are ready to install into your vehicle.

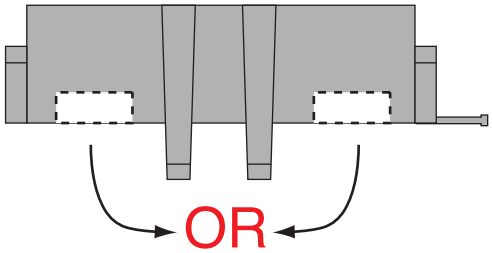

Notched Cover

PART #

510476 Z

DESCRIPTION:

Alternator and Main Power Connection Kit Various Applications

92972153 instruction sheet rev 0.1 6/24/2019

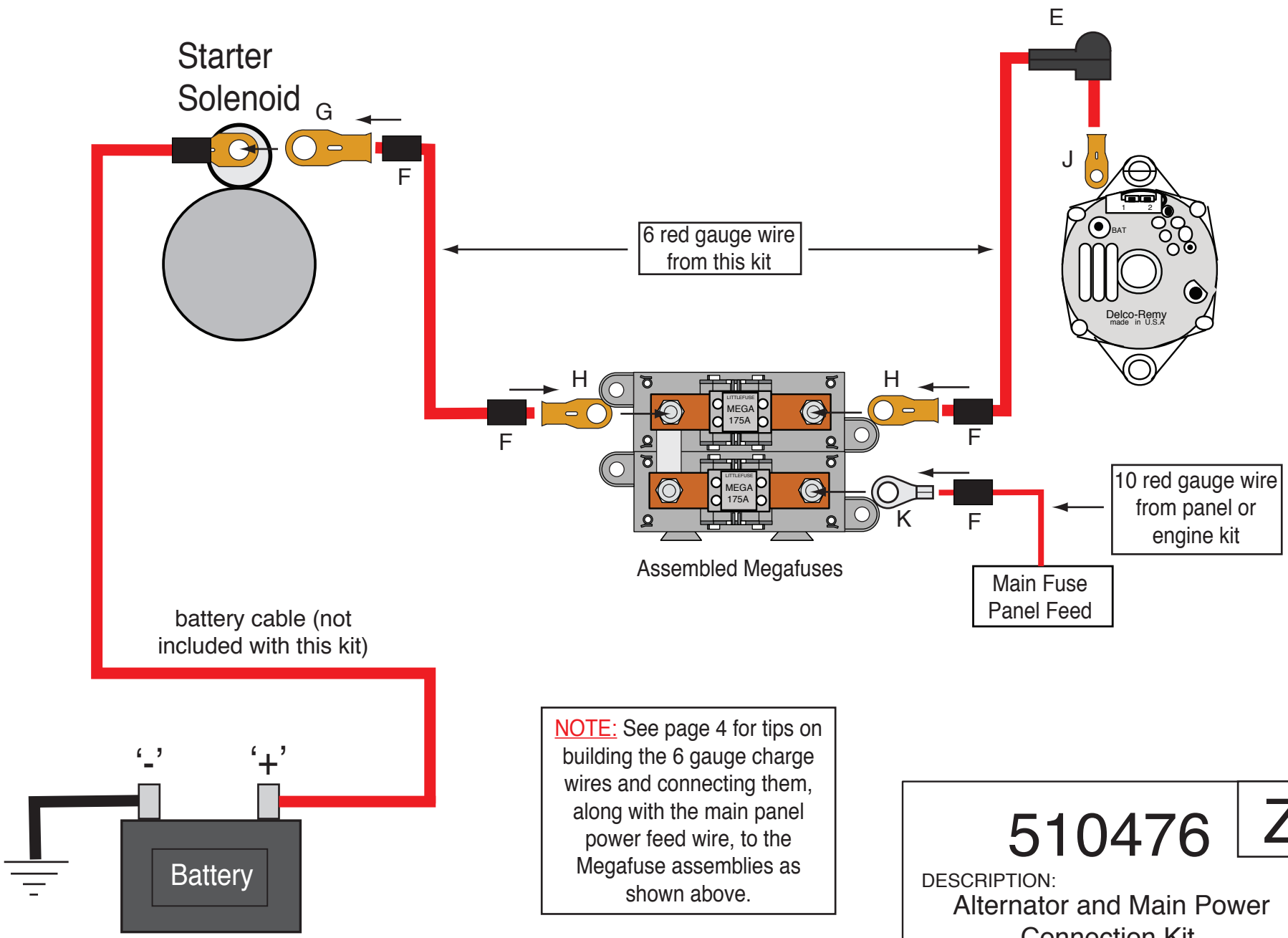

NOTE: See page 4 for tips on building the 6 gauge charge wires and connecting them, along with the main panel power feed wire, to the Megafuse assemblies as shown above.

510476 Z

DESCRIPTION:
Alternator and Main Power Connection Kit
Various Applications

92972153 instruction sheet rev 0.1 6/24/2019

Building the 6Ga. charge wires and connecting them and the main panel power feed wire to the Megafuse assemblies:

NOTE: Make sure that your battery is disconnected! You will need to install the preassembled Megafuses from page 2 in your vehicle to start this part of the installation.

1. Pre-cut item F shrink tubing into (6) 1.00” - 1.25” pieces.

2. Take the 12-foot piece of 6Ga. red wire from this kit and route it from your starter (or other battery feed) over to the area where you have mounted your Megafuse and cut it to length. Strip the insulation on each end back 1/2”. Install 2 pieces of shrink tubing F onto the wire. At the starter end, crimp and solder (1) of terminal G onto the wire. At the Megafuse end, crimp and solder (1) of terminal H onto the wire. Slide the shrink tubing over the terminals and heat it up to shrink it down.

3. Take the remaining portion of the 12-foot piece of 6Ga. red wire from this kit and route it from your alternator over to the area where you have mounted your Megafuse and cut it to length. Strip the insulation on each end back 1/2”. Install 1 piece of shrink tubing F onto the wire. At the alternator end, slip on boot E as shown on page 3, then crimp and solder (1) of terminal J onto the wire. At the Megafuse end, crimp and solder (1) of terminal H onto the wire. Slide the shrink tubing over terminal H and heat it up to shrink it down.

4. Take the 10Ga. red main power feed wire from your engine or panel sub-kit and route it over to the area where you have mounted your Megafuse and cut it to length. Strip the insulation back 3/8”. Install 1 piece of shrink tubing F onto the wire, then crimp and solder (1) of terminal K onto the wire.

5. Remove the 4 loosely tightened nuts and lock washers from the assembled Megafuses, then using the drawing on page 3 as a guide, install your pre-assembled wires from steps 2-4 above. Re-install the 4 nuts and lock washers onto the assembled Megafuses and tighten them down. This part of your installation is now complete.

510476 Z

DESCRIPTION:
Alternator and Main Power Connection Kit
Various Applications

92972153 instruction sheet rev 0.1 6/24/2019

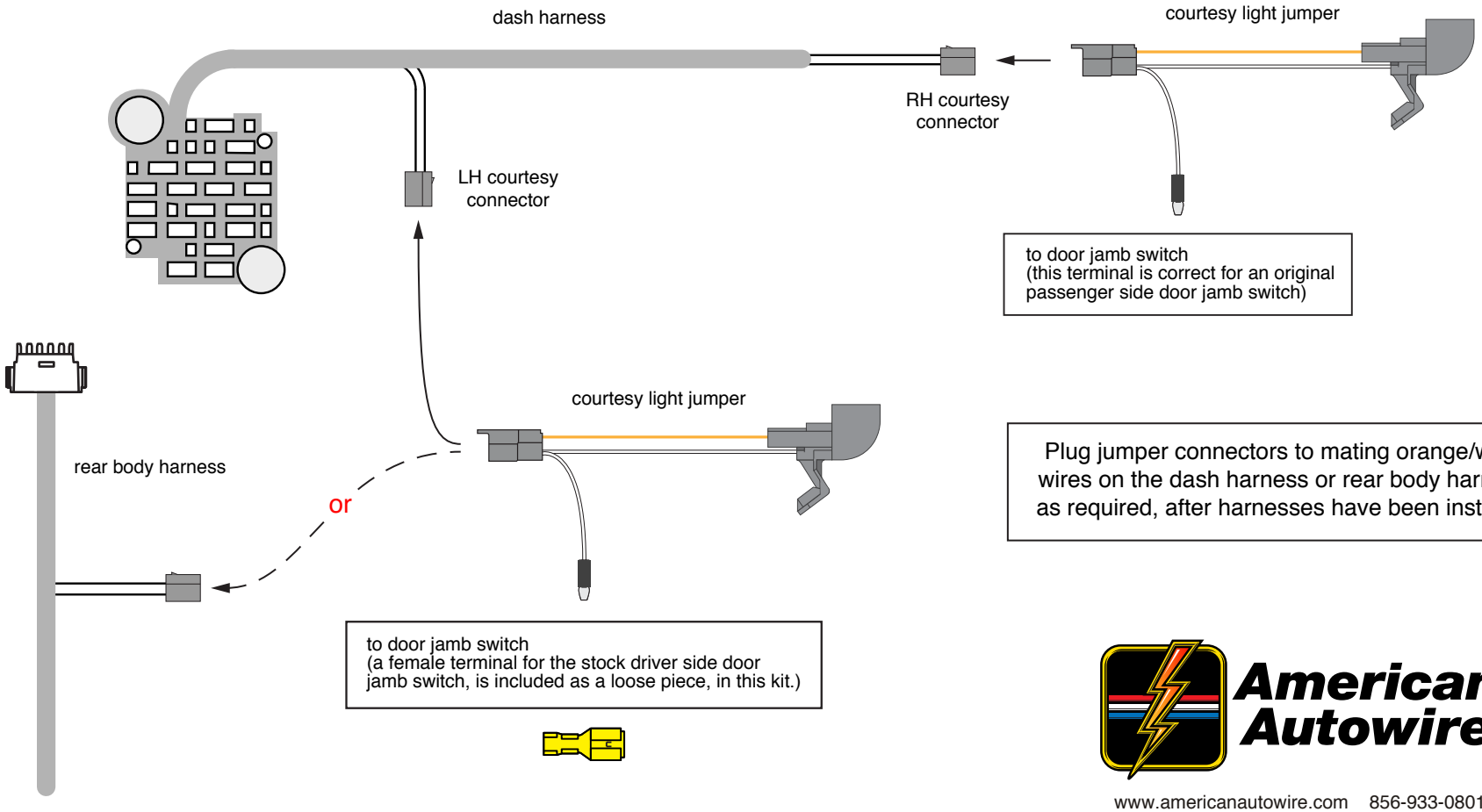

Plug jumper connectors to mating orange/white wires on the dash harness or rear body harness, as required, after harnesses have been installed.

American Autowire

www.americanautowire.com 856-933-0801

NOTE: Your new underdash courtesy light kit uses # 631 bulbs (not included with this kit). They may be purchased at any auto parts store.

PART #

500708

N

DESCRIPTION:

Courtesy Light Kit

92966085 Rev 1.1 6/27/2016

Classic Update Series

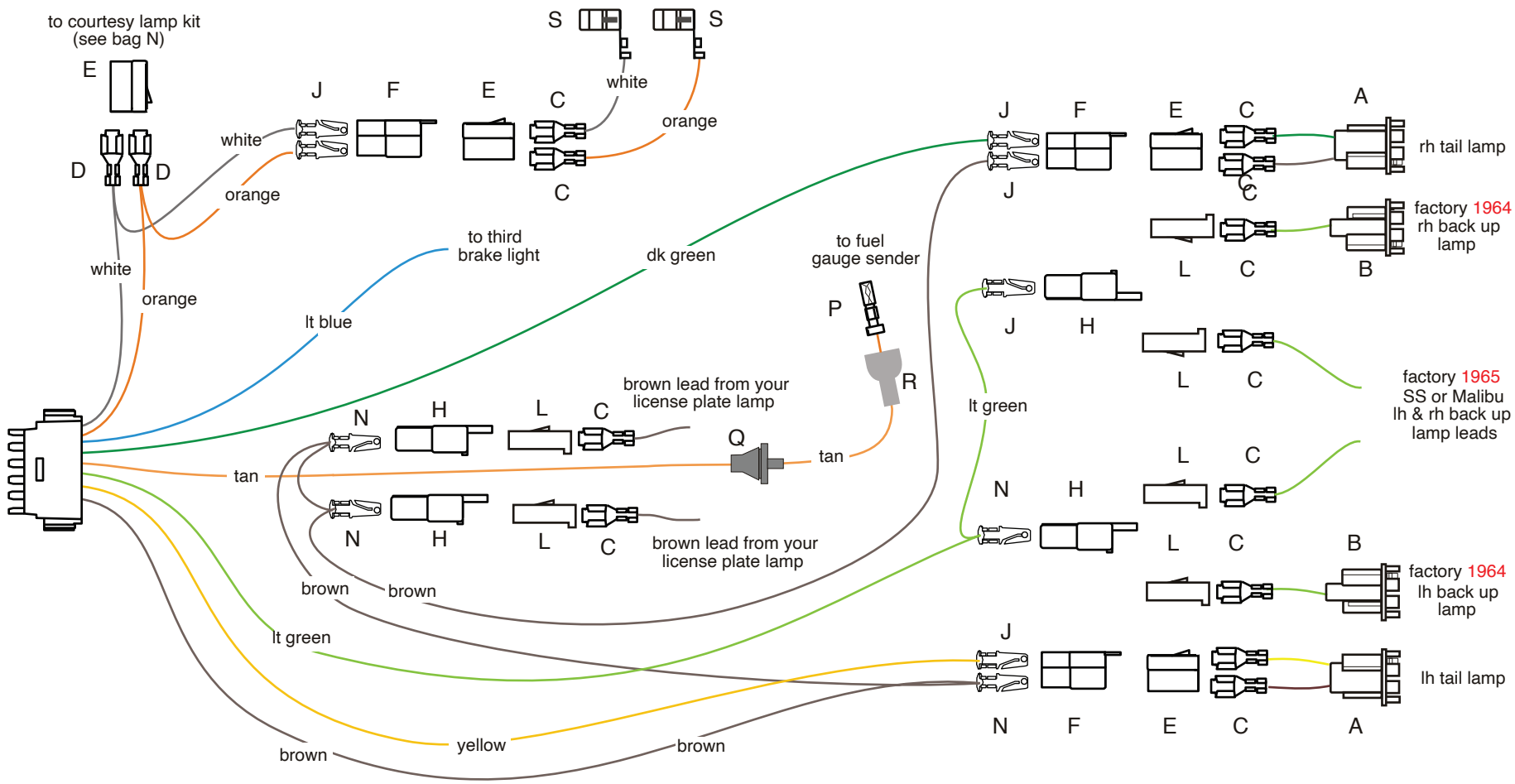

American Autowire
800-482-9473

USE THIS SHEET FOR A
64-65 CHEVELLE

USE THIS SHEET FOR A 64-65 CHEVELLE CAR

Classic Update Series

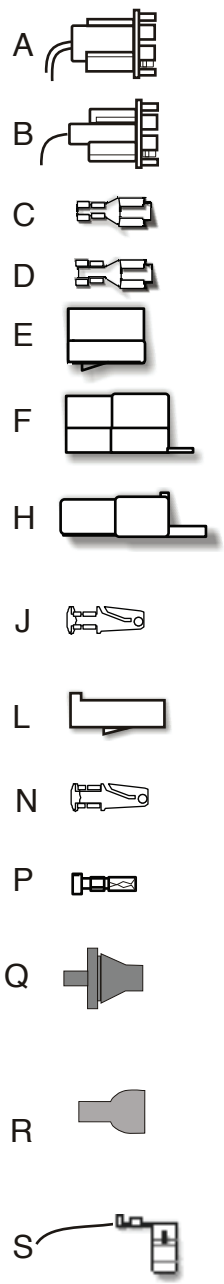

Connect the main connector to the mating connector on the dash harness 500957 bag G. Route this harness along door sill and into trunk

LIGHT BLUE	Third brake light	Connect to the third brake lamp, if equipped.
TAN	Fuel Tank lead (with rubber end)	Route wires to the rear of the car, measure to proper length going thru access hole in trunk floor and to the sending unit, cut to length. Slide grommet Q onto wire in the direction shown on sheet 1, slide boot R onto wire, strip back end and crimp terminal P onto wire. Once terminal P is secured to wire, pull boot R down over terminal P and install onto sending unit.
BROWN	Parking lamps	Route this wire to the left side tail light and trim to length. Double this wire with the cut off portion and install terminal N and plug into connector F. Route the loose end to the LH license plate lamp. Cut to length, and double this wire with the cut off portion, using terminal N and plug into connector H. Route the loose end to the right side license plate lamp, trim to length, install terminal N and plug into connector H. Route the loose end to the RH tail light, trim to length, install terminal J and plug into connector F.
YELLOW	LH Stop / Tail	Route this wire to the LH tail lamp and cut to length and install terminal J. Plug this wire into connector F from above. Install terminal C and connector E on the tail lamp pigtail A, maintaining color continuity with connector F. Plug connector E into connector F.
DK GREEN	RH Stop / Tail	Route this wire to the RH tail lamp and cut to length and install terminal J. Plug this wire into connector F from above. Install terminal C and connector E on the tail lamp pigtail A, maintaining color continuity with connector F. Plug connector E into connector F.
LIGHT GREEN	Back up lamp feed	Route this wire to the LH back up lamp and trim to length and install terminal N and connector H. Route the loose end of the lt green wire to the right side back up lamp. Repeat this procedure with terminal J. On 1964 cars, install terminals C and connectors L on each of the back up pigtails B, and plug them into connectors H. On 1965 cars where the back up lamps are mounted in the rear bumper, the pigtail wire leads from your factory back up lamps will plug directly into connectors H from above. New terminals C and connectors L will need to be installed on the factory wire leads as the 1965 assemblies used a smaller terminal and connector.
WHITE	Courtesy ground	At the driver's side kick panel area, cut this wire and double it with the cut off portion using terminal D, and plug into connector E maintaining color continuity with the mating connector in the courtesy lamp kit (bag N). If you are using a dome lamp, route the loose end of this wire to the rear pillar area of the trunk, and install terminal J and connector F. Plug into connector F in location shown on sheet 1. (Note: a factory dome lamp harness will also plug into this connector, if you are not replacing the headliner at this time.) Install the loose white wire S (supplied with terminal installed) into the dome lamp. Route this wire to connector F (on white wire) location and trim to length. Install terminal C and connector E, maintaining color continuity with the white wire in connector F.
ORANGE	Courtesy Lamp	At the driver's side kick panel area, cut this wire an double it with the cut off portion using terminal D, and plug into connector E maintaining color continuity with the mating connector in the courtesy lamp kit (bag N). If you are using a dome lamp, route the loose end of this wire to the rear pillar area of the trunk, and install terminal J and connector F. Plug into connector F in location shown on sheet 1. (Note: a factory dome lamp harness will also plug into this connector, if you are not replacing the headliner at this time.) Install the loose orange wire S (supplied with terminal installed) into the dome lamp. Route this wire to connector F (on orange wire) location and trim to length. Install terminal C and connector E, maintaining color continuity with the orange wire in connector F.

92968212 instruction rev 2.0 12/23/2010

Classic Update Series

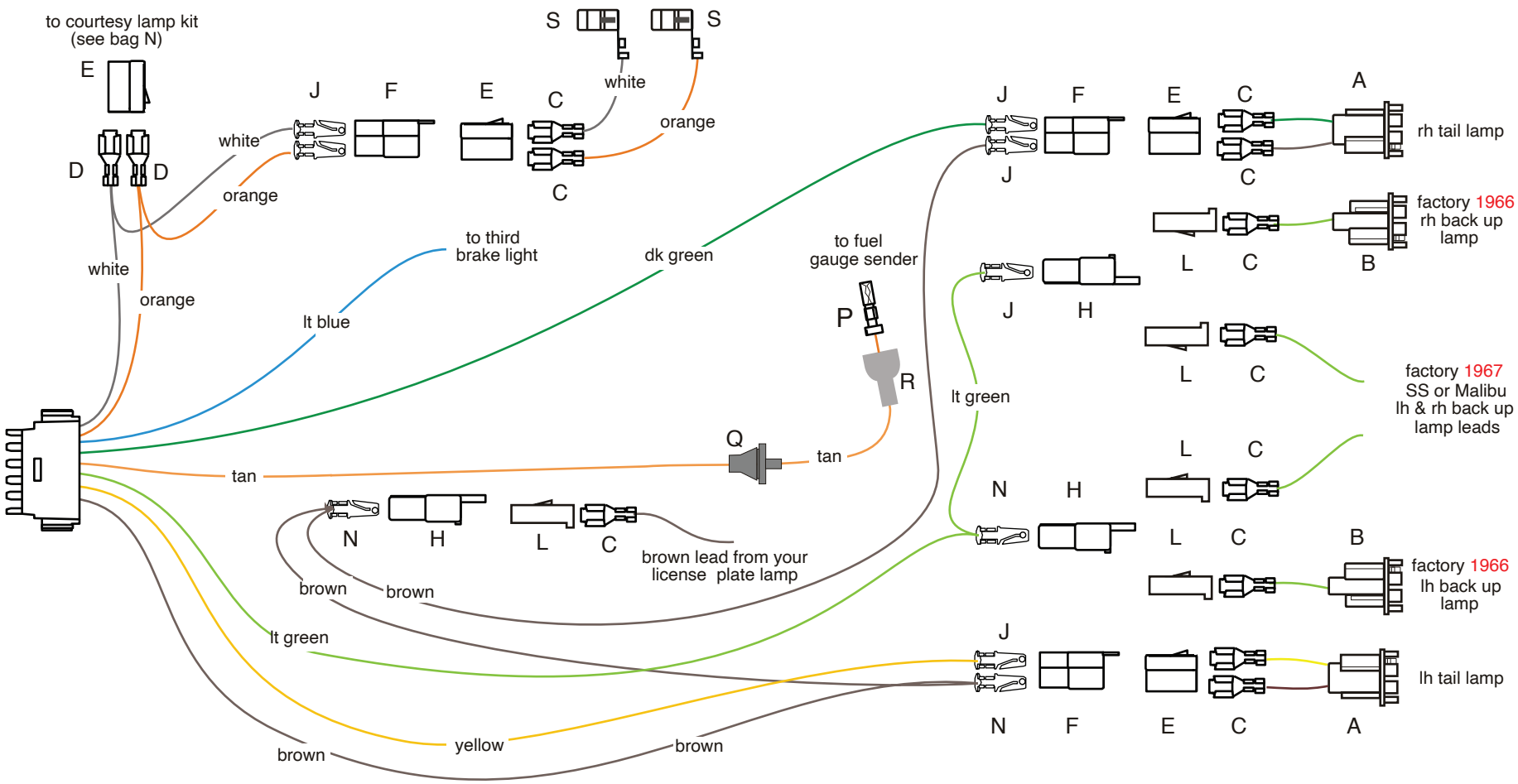

USE THIS SHEET FOR A
66-67 CHEVELLE

American Autowire

American Autowire
800-482-9473

Classic Update Series

bag
M

REAR BODY KIT

500986

92968212 instruction rev 2.0 12/23/2010

USE THIS SHEET FOR A 66-67 CHEVELLE CAR

Classic Update Series

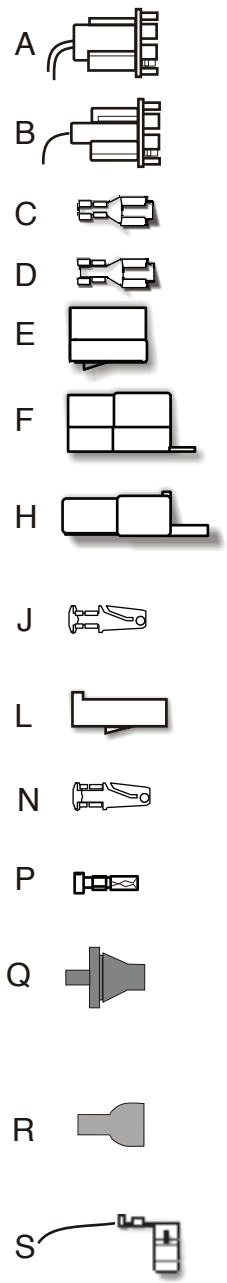

Connect the main connector to the mating connector on the dash harness 500957 bag G. Route this harness along door sill and into trunk

LIGHT BLUE	Third brake light	Connect to the third brake lamp, if equipped.
TAN	Fuel Tank lead (with rubber end)	Route wires to the rear of the car, measure to proper length going thru access hole in trunk floor and to the sending unit, cut to length. Slide grommet Q onto wire in the direction shown on sheet 3, slide boot R onto wire, strip back end and crimp terminal P onto wire. Once terminal P is secured to wire, pull boot R down over terminal P and install onto sending unit.
BROWN	Parking lamps	Route this wire to the left side tail light and trim to length. Double this wire with the cut off portion and install terminal N and plug into connector F. Route the loose end to the license plate lamp. Cut to length, and double this wire with the cut off portion, using terminal N, plug into connector H. Route the loose end the right side tail lamp, trim to length, install terminal J and plug into connector F.
YELLOW	LH Stop / Tail	Route this wire to the LH tail lamp and cut to length and install terminal J. Plug this wire into connector F from above. Install terminal C and connector E on the tail lamp pigtail A, maintaining color continuity with connector F. Plug connector E into connector F.
DK GREEN	RH Stop / Tail	Route this wire to the RH tail lamp and cut to length and install terminal J. Plug this wire into connector F from above. Install terminal C and connector E on the tail lamp pigtail A, maintaining color continuity with connector F. Plug connector E into connector F.
LIGHT GREEN	Back up lamp feed	Route this wire to the LH back up lamp and trim to length and install terminal N and connector H. Route the loose end of the lt green wire to the right side back up lamp. Repeat this procedure with terminal J. On 1966 cars, install terminals C and connectors L on each of the back up pigtails B, and plug them into connectors H. On 1967 cars where the back up lamps are mounted in the rear bumper, the pigtail wire leads from your factory back up lamps will plug directly into connectors H from above. New terminals C and connectors L may be used in the event that your originals are damaged.
WHITE	Courtesy ground	At the driver's side kick panel area, cut this wire and double it with the cut off portion using terminal D, and plug into connector E maintaining color continuity with the mating connector in the courtesy lamp kit (bag N). If you are using a dome lamp, route the loose end of this wire to the rear pillar area of the trunk, and install terminal J and connector F. Plug into connector F in location shown on sheet 1. (Note: a factory dome lamp harness will also plug into this connector, if you are not replacing the headliner at this time.) Install the loose white wire S (supplied with terminal installed) into the dome lamp. Route this wire to connector F (on white wire) location and trim to length. Install terminal C and connector E, maintaining color continuity with the white wire in connector F.
ORANGE	Courtesy Lamp	At the driver's side kick panel area, cut this wire an double it with the cut off portion using terminal D, and plug into connector E maintaining color continuity with the mating connector in the courtesy lamp kit (bag N). If you are using a dome lamp, route the loose end of this wire to the rear pillar area of the trunk, and install terminal J and connector F. Plug into connector F in location shown on sheet 1. (Note: a factory dome lamp harness will also plug into this connector, if you are not replacing the headliner at this time.) Install the loose orange wire S (supplied with terminal installed) into the dome lamp. Route this wire to connector F (on orange wire) location and trim to length. Install terminal C and connector E, maintaining color continuity with the orange wire in connector F.

92968212 instruction rev 2.0 12/23/2010

Most switches supplied with Classic Update and Universal Kits ship with the shaft pre-installed. In many instances, the switch can be installed without removing the shaft, but in some cases the switch shaft may need to be trimmed to fit your specific dash. In this situation, reference Trim to Fit instructions on the back of this page for details.

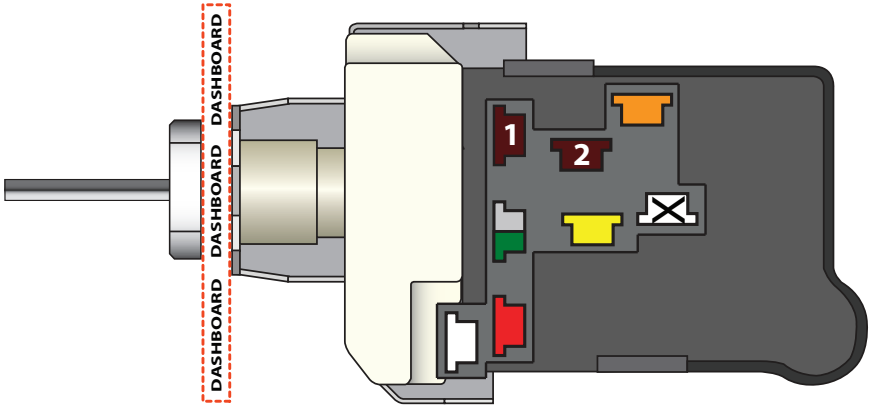

1	Parking Lights - Stay on with headlights
2	Tail Lights - On in the park and headlight positions
	Fused Battery Feed - For park, tail and dash lamps
	Headlight Feed - Power to the headlight dimmer switch
	12V Battery Feed - Unfused power to the switch for headlights
	Courtesy Ground - Ground feed to the dome and courtesy lights
	Part-time Parking Lights - Turns off when the headlights are on (Not supported by all kits)
OR	Dash Lights - Output to the dash light fuse or lights

To install your new headlight switch:

1. Install the switch from behind the dash, and align the switch body with the mounting hole. The switch body has an alignment tab that must line up with the notch in the dashboard mounting hole.

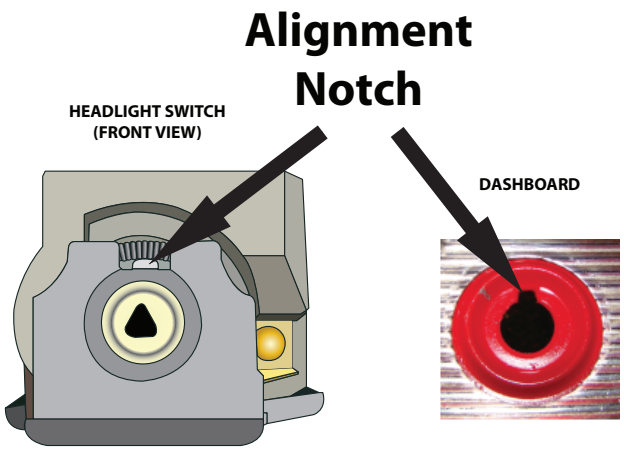

2. Install the switch mounting nut and tighten.

3. Gently press shaft into switch until it stops, then press firmly until it “clicks.” Pull shaft back out to confirm it is seated correctly. The shaft should be locked into place inside switch.

4. If the shaft does not lock, reinsert applying moderate pressure and slowly move shaft side to side for lock to engage. Make sure switch body is still supported to prevent flexing. Press shaft firmly until it clicks into place.

5. Ensure the shaft is fully seated and in the off position.

American Autowire

www.americanautowire.com 856-933-0801

PART # **500332**

DESCRIPTION:

Headlight Switch

92964649 Rev 3.0 1/10/2020

To Trim Shaft to Fit or Remove Shaft:

The headlight shaft knob should extend from the face of the mounting nut, and must allow enough clearance for the switch to turn off. If the shaft is longer than necessary for your specific dash it can be trimmed to fit. Always trim the knob end of the shaft only and follow the guidelines below for best results.

1. With the headlight switch installed, loosen the set screw and remove the knob. Make sure the switch is in the "off" position by pushing the shaft toward the back of the switch.

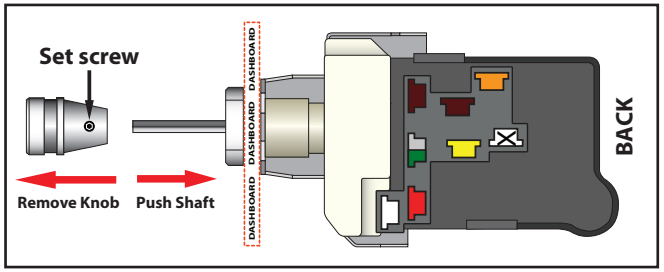

Switch in OFF position
(shaft pushed all the way in)

2. Set knob alongside shaft and mark the desired location for cutting on the shaft.

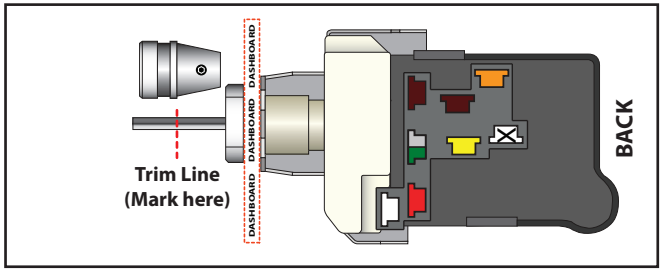

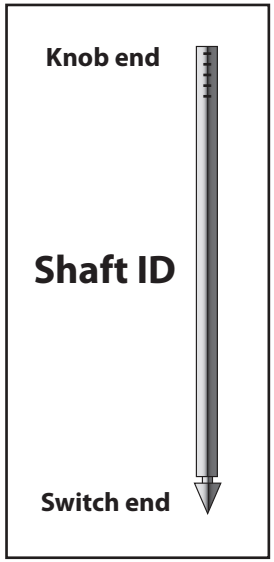

3. Remove the shaft and trim at mark. The shaft can be released from the switch by pulling it outward (toward the rear of the vehicle). Once fully in the "On" position, press and hold the release button on the base of the switch body. Once button is pressed, continue to pull the shaft outward. New switches may be tight, and it might be necessary to move the shaft side to side slightly while pulling to release.

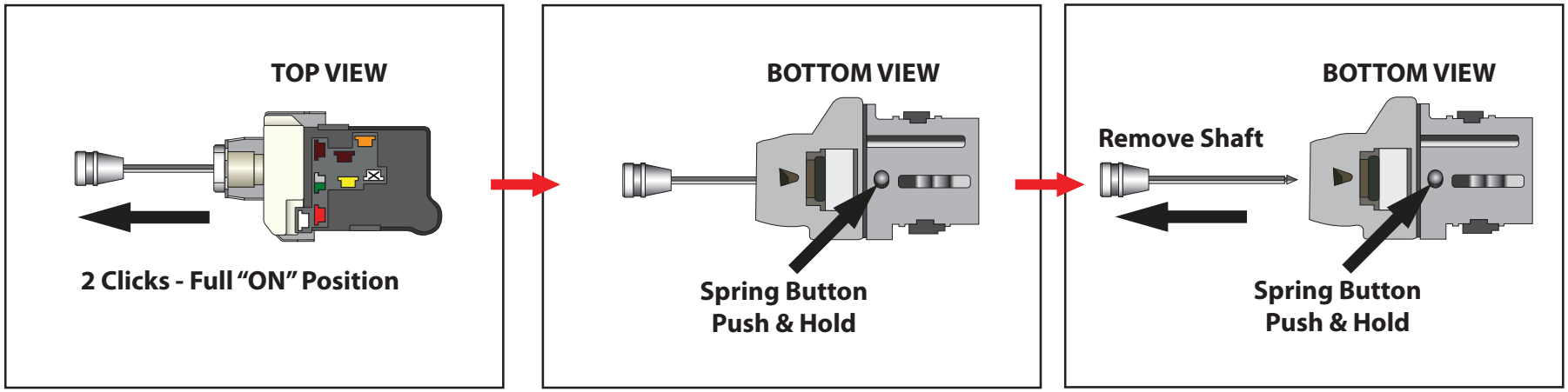

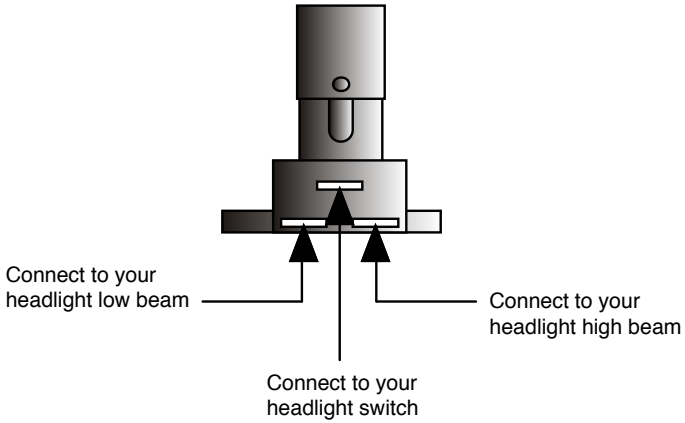

Connect the Dimmer Switch wires as shown above.

1. The top center terminal of the Dimmer Switch is connected to the Headlight switch.
2. The terminal on the right side is connected to your headlight high beam terminal.
3. The terminal on the left side is connected to your headlight low beam terminal.

American Autowire

www.americanautowire.com 856-933-0801

PART #

500042

DESCRIPTION:

DIMMER SWITCH

92964573 Rev 3.1 12/5/2014

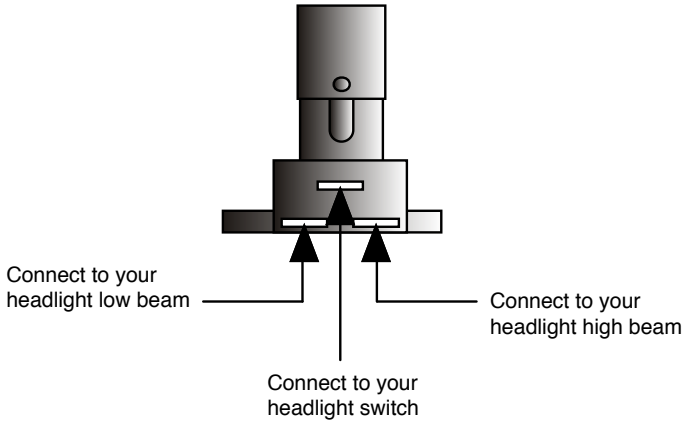

Connect the Dimmer Switch wires as shown above.

1. The top center terminal of the Dimmer Switch is connected to the Headlight switch.
2. The terminal on the right side is connected to your headlight high beam terminal.
3. The terminal on the left side is connected to your headlight low beam terminal.

American Autowire

www.americanautowire.com 856-933-0801

PART #

500042

DESCRIPTION:

DIMMER SWITCH

92964573 Rev 3.1 12/5/2014